Independent University **Bangladesh (IUB)**

IUB Academic Repository

Internship Reports Autumn 2022

2023-01-30

An Undergraduate Internship on “Design and Development of an Electric Motor-Bike”

Hasan, Md. Jahid

Independent University, Bangladesh

https://ar.iub.edu.bd/handle/11348/755

Downloaded from IUB Academic Repository



An Undergraduate Internship on "**Design and Development of an Electric Motor-Bike**"By

Md. Jahid Hasan

Student ID: 1830329

At

MotorX

Autumn, 2022

Supervisor:

Md. Asif Bin Khaled

Lecturer

Department of Computer Science & Engineering

Independent University, Bangladesh

January 30, 2023

Dissertation submitted in partial fulfillment for the degree of Bachelor of Science in Computer Science

Department of Computer Science & Engineering

Independent University, Bangladesh

Attestation

I hereby attest to the accuracy of the following report. I was the intern who completed this report during my internship at MotorX. My company supervisor Kazi Fahmid Hasan, and my Institution supervisor Mr. Md. Asif Bin Khaled was my primary contact throughout the duration of my internship.I have read and understood all instructions provided by my supervisor and believe that this report is an accurate representation of work done during my internship.

The purpose of this report is to showcase my work during the internship. I hope that it will show how I have been able to improve myself while working here at MotorX. I have worked hard to get this far, and now I want you all to know that I am ready for the next step in my career path!

জাহিদ হাসান — 2/02/2023

Signature — Date

Md. Jahid Hasan

1

Acknowledgement

I would like to thank my parents and Allah Almighty for getting me through this project. Thanks to my friends for their support and encouragement throughout the internship experience. I will always be grateful to my University supervisor Md. Asif Bin Khaled for his guideline and my company supervisor Mr. Kazi Fahmid Hasan for his support throughout the experience. I would also like to thank the company MotorX for giving me the chance to intern there, and also for its cooperation with me throughout the internship period.

Letter of Transmittal

30th January, 2023

Md. Asif Bin khaled

Internship Supervisor & Lecturer

Department of Computer Science and Engineering

Independent University, Bangladesh

Subject: Internship report on “Design and Development of an Electric Motor-Bike” in MotorX sister concern of Rongdhanu Group.

Dear Sir,

I am extremely grateful for the chance to submit an internship report to you on “Design and Development of an Electric Motor-Bike”", in MotoX a sister concern of Rongdhanu Group targeting the Electric Automobile Industry in Bangladesh. This report is based on my four month internship at the company and the project on which I worked. This report is based on my
Experiences, Learnings and the work I completed during my internship at MotorX.
Throughout my internship with the organization, I discovered that I acquired and used a variety of new skills and technology, I worked with new technology and systems. I would be delighted if the report I have written serves its intended purpose. I am indebted to you for your time, knowledge, direction, and support. I have attempted to complete the report as accurately as possible. I genuinely hope and pray that you will accept the report as my Final report.

Thank you for your cooperation and guideline throughout the semester.

Yours sincerely,

Md. Jahid Hasan

ID: 1830329

Evaluation Committee

Asif Bin Khaled

Signature

Asif Bin Khaled

Name

Supervisor

1.02.2022

Signature

Md. Mahmudul Kabir Peyal

Name

Internal Examiner

Head

Signature

Mahmudul Islam

Name

External Examiner

Signature

Name

Convener

Abstract

This report provides an overview of the current state of electric motorbike development and its future prospects. The development of battery technology, charging infrastructure, and electric motorcycle design are all covered in the report. The top companies and their offerings are covered, as well as the current market trends for electric motorcycles. The research also discusses how government regulations might encourage the use of electric motorcycles, as well as the industry's potential and difficulties for growth. The consideration of the possible advantages of electric motorbikes for both consumers and the environment finishes the report.As the globe moves toward more ecologically friendly and sustainable sources of transportation, electric motorcycle research has accelerated recently. The key forces behind this rise are improvements in battery technology, the appearance and functionality of electric motorcycles, and the expansion of the infrastructure for charging.

Contents

Attestastion…… …… 1
Acknowledgements…….2
Letter of Transmittal ...……3
Evaluation committe…….4
Abstract…….. 5
List of Figures ...…….8
List of Tables ……9

1. Introduction
   1.1 Background of the Work…… …….10
   1.2 Objectives…… …… ……..10
   1.3 Scopes…… ……..10
2. Literature review
   2.1 Relationship with undergraduate studies……12
   2.2 Related Works…….13

3. Project management and financing
   3.1 Work Breakdown Structure……16
   3.2 Process/Activity wise Time Distribution ……..17
   3.3 Gantt Chart…….18
   3.4 Process wise Resource Allocation……..18
   3.4 Estimated Costing……..19

4. Methodology
   4.1 Waterfall model…….……23
      4.1.1 Requirements analysis ……..24
      4.1.2 Design……. ……..24
      4.1.3 Implementation…….. ……..…..25
      4.1.4 Testing…….…….. ……..…..25
      4.1.5 Deployment…..…….. ……..…..25
   4.2 Sprint Planning…… ……...……..25

5. Body of the Project
   5.1 Work Description..…….……27
      5.1.1 Background Research ……...27
      5.1.2 Project Planning……..……...28
      5.1.3 Motor Kit selection…….. ……..…..28
      5.1.4 Battery Pack design and development…….…..30
      5.1.5 Battery Station planning…..……..…..32
      5.1.6 Bike Electronics development…..……..….33
   5.2 System Analysis ...…….……34
      5.2.1 Six Element Analysis ……...34

5.2.2 Feasibility Analysis…….....35
5.2.3 Problem Solution Analysis…….. ……...…….…38
5.2.4 Effect and Constraints Analysis …….…...…….……39
5.3 System Design ...…….…….....….40
5.3.1 Rich Picture …….…….40
5.3.2 UML Diagrams …….…….41
5.4 Product Features ….…….…….....…45

6. Results and analysis
6.1 First prototype development……...…50
6.2 Final Product development ……..……...51
6.3 Battery Pack Design….…….53

7. Project as engineering and problem analysis
7.1 Sustainability of the Project/Work……...……...…55
7.2 Social and Environmental Effects and Analysis……..……...56
7.3Addressing Ethics and Ethical Issues…….58

8. Lesson learned
8.1 Problems Faced During this Period..……...……...…59
8.2 Solutions to the problems…….……..…….…..60

9. Future work and conclusion
9.1 Future Works……...……...……...…61
9.2 Conclusion …….…….……..……61

Bibliography……..62

List of Figures

2.1 A patent by the name of Ogden Bolton Jr. of Canton Ohio on e-bike…… 12
2.2 A patent under the name of H. W. Libbey…….. 12
2.3 Walton e-bike model……13
2.4 Gogoro e-bike model ……..14
2.5 Battery swapping moment……...14
3.1 Work Breakdown structure……. 15
3.2 Gantt Chart……..17
4.1 Waterfall Methodology ……..23
4.2 Sprint Planning ……..25
5.1 A mid drive gear motor kit……28
5.2 A Hub Motor Kit……...29
5.3 5th version…….30
5.4 7th version…….30
5.5 Daly BMS IO……....30
5.6 Daly BMS UART Communication with Esp32……...31
5.7 Graphical view of a Battery Station ……32
5.8 E-bike market size, 2020 to 2030 (USD Billion).....35
5.9 E-bike market share by region, 2020(%).....36
5.10 Rich Picture……39
5.11: Fall Detection System……41
5.12: Accident detection system…….....41
5.13: Tracking system…… 42
5.14: Anti theft system……42
5.15: Access control system……43
5.16: Bike monitoring system…….43
5.17: Rear camera view……...44
5.18: Communication with mobile app……...…44
5.191: Schematics of Fall detection system……..45
5.20: Schematics of Accident detection system…… .46
5.21: Schematics of Bike tracking system……..46
5.22: Schematics of Anti theft system……....47
5.23: Schematics of Access control system……...47

5.24: Schematics of Bike monitoring system……..……..48
5.25: ESP32 Cam rear camera view…….……..49
5.26: Schematics of Mobile app communication……...49
6.1 Design of Super 73…… ..50
6.2 Our first prototype……51
6.3 Design of Honda super cub 2022…….51
6.4 Final product design with weight.....52
6.5: Final product design (V15).....53
6.7 A single layer of MotorX's battery pack……..54

List of Tables

3.1Time Distribution…….…… 4
3.2 Cost Estimation…….…….. 4
3.3 Project salary by Designation..……5
5.1 Mid Drive eBikes: Pros and Cons ……..6
5.2 E-bike Market Share, By Battery Type, 2020 (%)……...6
5.3 :Global E-bike Market Revenue (USD Million) and Growth Rate Comparison by Battery Type (2017-2030)……. ……9
7.1 Emission factors for commonly used vehicle in Dhaka city, Bangladesh……..9

Chapter 1

Introduction

1.1 Background of the Work

MotorX is a startup company whose objective is to develop Electric vehicle solutions for Bangladesh. This project's relationship with Rangdhanu Group has officially begun in 2022. Rangdhanu Group is a multinational company, they are active in a wide range of industries, including real estate, food and beverage, and Mehedi Mart etc. MotorX is one of the sister concerns of RG.

E-bikes are equipped with a motor system, a controller to operate that system, and a battery to power the entire unit. The motor offers supplemental power to facilitate passenger comfort. In this context, an e-bike provides considerable advantages over a traditional bicycle. This allows the rider the option of turning on the batteries and, consequently, the motor, whenever he believes he lacks adequate strength to continue pedaling, such as when he suddenly encounters a steep incline or long stretch of road. The motor would subsequently alter its output to meet the increased requirements, resulting in an overall more comfortable ride. When the rider decides to engage the motor, it is solely his decision. He may choose to have the motor propel him throughout the entire journey, or he may save it for an emergency.

1.2 Objectives

The main objective of this project is to manufacture the e-bike. And also, at different locations we will have our battery swapping stations. The users will be changing the battery in the battery swapping station. It will also provide the customers a convenient medium to connect via the web platform. On the server we provide vehicle location and Battery information. Also, this website is going to be a responsive website so users can access it though computer or mobile devices.

1.3 Scopes

ECO-FRIENDLY: Due to conventional energy fuels such as petrol, diesel air pollution has been increased which led to global warming. E-Bikes are eco-friendly vehicles which are powered by batteries and do not harm the environment like traditional vehicles.

SAFETY AND RELIABLE: High Engineering techniques for the safety standards have been implemented in E-Bikes. Speed of the E-bike is controlled by speed and braking sensors. Many features like mid – drive motors, no resistance motor have improved the performance of E-bike for incredible riding experience.

LOW COST AND MAINTENANCE: Electric bikes are not much expensive compared to traditional ones. Fuel cost is the main factor in traditional ones, whereas in E-bikes fuel is not a constraint. Due to this, the maintenance of the bike is also low which adds a better advantage.

Chapter 2

Literature review

2.1 Relationship with undergraduate studies

I have learnt about electrical components in CSE 104. The connection between electric circuit theory and field theory. Combinational logic foundations and circuits RLC circuits; sinusoidal circuit response; mutual inductance and transformers; operational amplifiers; computer assisted circuit design. Which was required for my internship since I would be working with several sorts of electric circuits. In CSE 210 this course I have learned about conductors and semiconductors; p-type and n-type semiconductors; Drift and Diffusion Current. The operation of P-N junction diodes, contact potential, current-voltage characteristics, simplified dc and ac diode models, resistance and capacitance. Being required to deal with electric vehicles necessitated familiarity with several ideas. CSE 303 This course instructed me on database design and management. This course examines the database development process, database architectural ideas, relational algebra, and SQL. Rich image, E-R model, relational data model, normalization, object-oriented data modeling; database security, management, and distributed systems. Using which we built our cloud server. CSC 212 Microprocessor and Assembly Language This course introduced me to microprocessor architecture, addressing mechanism, instruction set, and instruction format; assembly language programming, including assembling, linking, and running programs; program control instructions and interrupts; and microprocessor interfacing with memory and other components. My internship required familiarity with microprocessor programming and embedded systems, and I was also questioned on the topic during my job interview. CSE 309 Web Applications and Internet This course provides a broad introduction to web technologies and their applications. Mobile app design and development. We have a dedicated mobile app for our EV ecosystem, which we built using Flutter and Firebase as a backend database. The study of robotics encompasses a vast array of traditionally computer science-related topics, such as distributed and adaptive control, architecture, software engineering, real-time systems, information processing and learning, mechanics and dynamics, geometrical reasoning, and artificial intelligence. The computational and mechanical capabilities of robots are platform and environment dependent.

2.2 Related Works

History of Electric bikes: It is unexpected to learn how long ago the experiment was conducted to convert bicycles to run on electricity. According to the documentation, the first electric motorcycles were already in production in the 1890s. That is supported by a number of patents from the era. Ogden Bolton Jr. of Canton, Ohio, submitted a patent application for a "electrical bicycle" on September 19, 1895. (Patent number: 552271). The motor on the bicycle may consume up to 100 amps of power from a 10-volt battery. The back wheel received the hub motor. At that time, bicycle gears were still an enigmatic concept. So, it wasn't created with it[1].

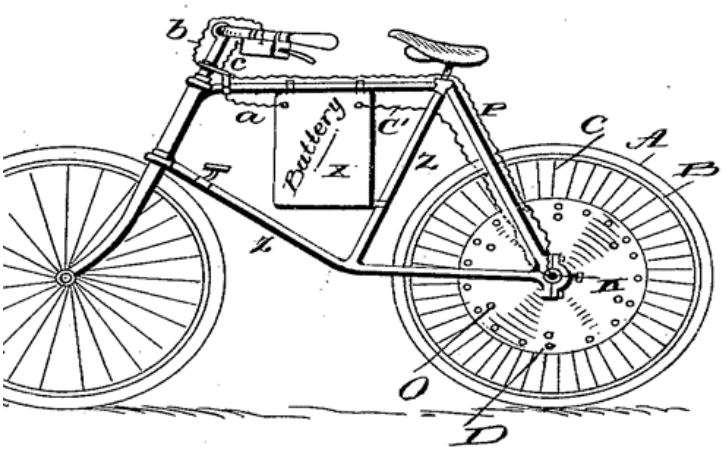

Fig.2.1: A patent by the name of Ogden Bolton Jr. of Canton Ohio on e-bike[1]

On 8 November of the same year, another patent application for an "electric bicycle" was filed by Hosea W. Libbey of Boston[2].



Fig.2.2: A patent under the name of H. W. Libbey[2]

During that time in 1897, Hosea W. Libbey from Boston state invented an electric bike that ran on a double electric motor. The motor has integrated within the hub of the rear wheel. This model has been reused in various latest designs of e-bikes at present times.It was by year 1898, a belt connecting the outer edge of the wheel to the motor patented in the name of Mathew J. Steffens. In the same year John Schnepf tried a back wheel friction “roller-wheel” style electric bicycle. In 1969 a modification of the same version was done consisting of 4 motors connected in series with the support of clock-wheel gears[2].

MotorX has the most functionalities in common with **Walton Digi-Tech Industries Limited's**. Walton Digi-Tech Industries Limited's Deputy Managing Director, Engineer Liakat Ali, said that they are marketing e-bikes in the domestic market under the brand name Takyon with a Walton logo. Walton’s electric bike, under the brand name Takyon, got the approval of the Bangladesh Road Transport Authority (BRTA). The Walton e-bike is the first product in the segment to receive BRTA approval in Bangladesh. Like conventional gasoline-run motorbikes, the eco-friendly Walton e-bike is now legally allowed to run on Bangladeshi roads with BRTA registration. This bike will cost only 10-15 paisa per kilometer[9].



Fig.2.3: Walton e-bike model[9]

In 2011, entrepreneurs Horace Luke and Matt Taylor founded **Gogoro**. Gogoro is a Taiwanese company that developed a battery-swapping refueling platform for two-wheeled electric scooters, mopeds, and motorcycles. In addition to developing its own line of electric scooters, the company offers its own vehicle innovations to vehicle manufacturer partners such as Hero, Yamaha, Aeonmotor, PGO, eReady, and eMOVING. Gogoro also operates the ridesharing service GoShare in Taiwan and on the Japanese island of Ishigaki. MotorX has similar plans like Gogoro in terms of Marketing strategy and Electric motyorbike development[3].

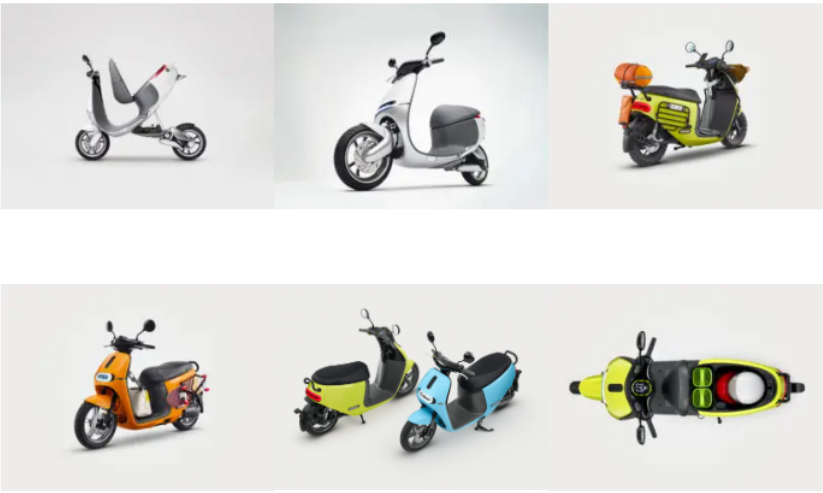

Fig.2.4: Gogoro e-bike model[3]



Fig.2.5: Battery swapping moment[4]

In January 2015, Gogoro unveiled its first consumer product, the Smartscooter, at the Consumer Electronics Show (CES) in Las Vegas. In addition to the scooter, Gogoro announced the Gogoro Energy Network, a battery-swapping network[7].

Chapter 3

Project Management and Financing

3.1 Work Breakdown Structure

Work breakdown structure (WBS) is a strategy for completing multi-step, complicated projects. It is a way for completing enormous tasks more quickly and effectively by separating and conquering them. The purpose of a work breakdown structure (WBS) is to make a complex project more manageable. By dividing it into smaller portions, many team members may work on it concurrently, resulting in increased team productivity and simplified project administration.

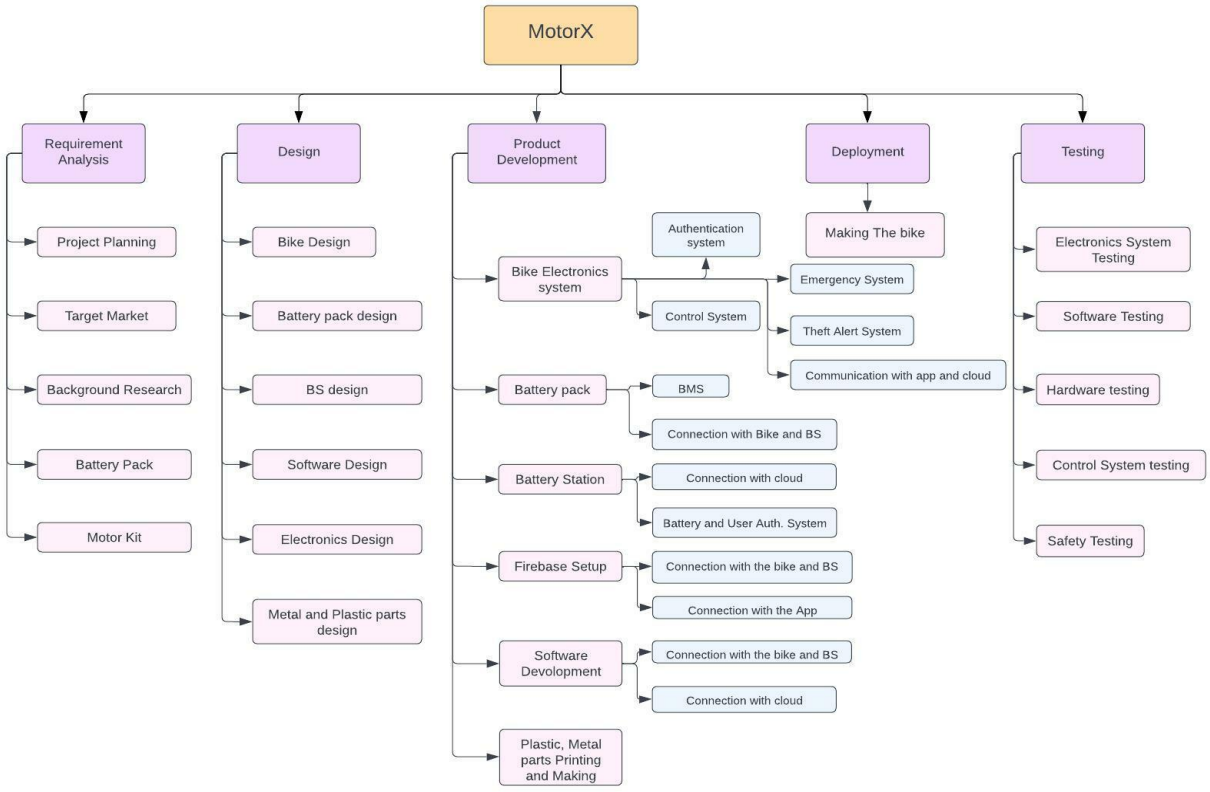

Fig.3.1: Work Breakdown structure

3.2 Process/Activity wise Time Distribution

The time allocation for the three months project is as shown in the table. Any activity can be performed simultaneously with other activity or after the earlier one is completed.

Table 3.1 Time Distribution

Designation	Department	% of work	Duration(Months)
Assistant (production)	Plastic and Metal parts Production	7%	4
Mechatronics Engineer	Bike Electronics, BS, Battery pack	30%	6
Software developer	Software	10%	5
Power engineer	Battery and BS(Battery Station)	10%	3
Mechanical Engineer	Metal parts Production and Assembly	20%	6
Industrial designer	Designing	15%	5
UI design (Intern)	Software	5%	4
Assistant (Intern)	General	3%	4

3.3 Gantt Chart

A Gantt chart is one of the most common and helpful ways to depict activities (tasks or events) against time. On the left side of the chart is a list of the activities, while a time scale runs along the top. Each activity is represented by a bar whose location and length indicate the activity start and finish dates.

Figure 3.2 shows the project timeline for our organization. The project's activity plan requires occasional modifications. The present status of our work does not allow us to accomplish it in the allowed time. Within the following four months, the project will likely be completed successfully.

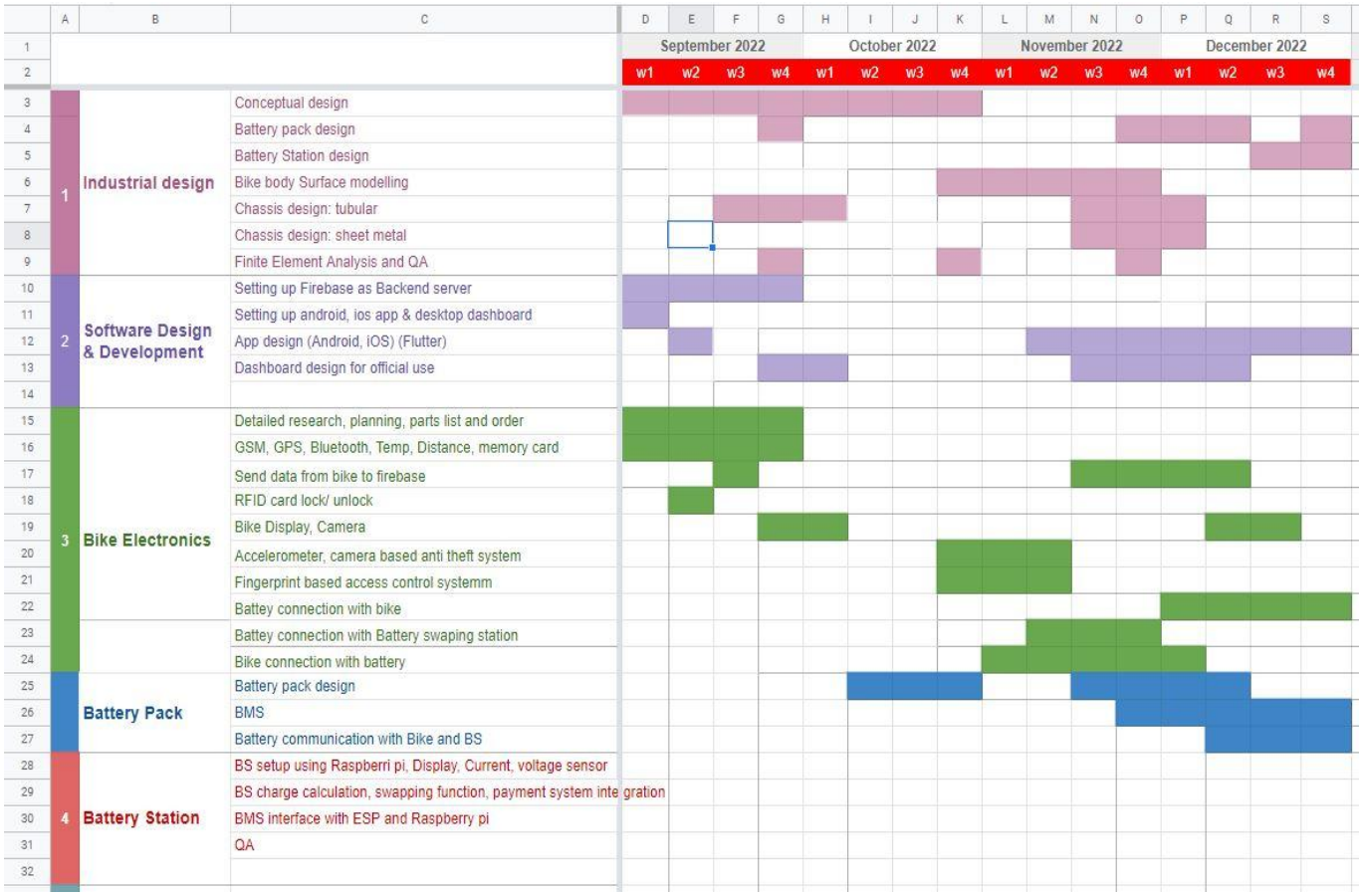

Fig.3.2: Gantt Chart

3.4 Process wise Resource Allocation

Requirement analysis: When I joined the company, background study on the topic had already been conducted. It consists of Bike design, Electronic components (specifications for the motor kit and battery) as well as the target market. I attended initial project planning meetings with the company's CTO and VC. We also discussed the target market and any other features that may be added to the electric bike. We also examined the project's cost, its sustainability, and its environmental impact.

Design: After the initial prototype, the bike's design was almost finalized. The CTO and VC of the company have already chosen to make the Moppet resemble the Honda Supercurb. However, creating the whole bike from scratch was quite difficult and time-consuming. Initially, the designer attempted to create a comprehensive design for the bike, but it took too much time and was often altered. It took over two months, and there was still plenty to accomplish. Then we

decided to divide the design and 3D print the battery layers and casing while we completed the battery pack. Within two weeks, we were able to begin 3D manufacturing the battery layers. However, the printing was imperfect. After almost ten printing and adjustments to the design, the lithium ion battery fit perfectly. In the meanwhile, body appearance, motor space, and fork design were also finalized. Currently, metal components are being designed, and when the motor kit arrives, the whole system will be ready for deployment.

Product Development: We provide separate goods such as the Battery Pack, Battery swapping station, monitoring software, and the bike itself. For deployment, the product is decomposed into product features. Each product has numerous functions, and each function corresponds to a certain function. Thus, the whole project consisted of several tasks. I was primarily responsible for performing all tasks pertaining to the bike's electronics, hardware, communication, authentication, and theft system, among others. I spend the majority of my time on product development and testing.

Deployment: As the schedule for constructing the bike, developing the battery pack, and constructing the Battery Station(BS) is six months long. In addition, we have already spent almost four months and believe we are on schedule. As each task's research, implementation, and testing have been completed, we have less work remaining. Currently, I'm working on the Battery Pack to get battery data from the BMS and manage the battery to extend its life. After this, according to my job list, I will have completed 70% of my assigned tasks. We will also shortly get our Motor kit and Fork. After that, we will begin manufacturing bicycles. We anticipate finishing it within the stated time frame.

Testing: As our EV ecosystem is currently in the deployment phase, we may not be able to do exhaustive testing. Nonetheless, throughout the development period, I tested every job I accomplished. In addition, prior to beginning a specific task, I conducted pre-task testing on individual components such as embedded devices, sensors, and microcontrollers to determine their advantages and disadvantages, how efficiently they can be connected and programmed, and, most importantly, whether or not they are acceptable and suitable for our project.

3.5 Estimated Costing

The pricing is an estimate based on the specs for the electric bike system that the company needs. In table 3.1, we can see an estimate of our project's related expenses. In this case, the total project cost is missing many components, including metal parts, silicon melting, and other expenditures. The expenses are shown on the planned timetable for our currently active project. Throughout the duration of the project, expenses are accrued.

Table 3.2 Cost Estimation

Category	Component	Model	Unit price (from website)	Units	Total (low)	Total (High)
Bike Electronics	Microcontrollers	ESP32	~ 3000	1	3000	3000
		ESP 8266	500 ~ 1000	5	2500	5000
		Other dev kits	3000 ~ 5000	1	3000	5000
	RTC (real time clock module)		30 ~ 300	2	60	600
	Ublox neo 6m gps		900 ~ 1500	1	900	1500
	cam, wifi, bluetooth		1000 ~ 2000	2	2000	4000
	accelerometer, gyro		500 ~ 2000	1	500	2000
	tachometer, speed sensor		1000 ~ 1200	1	1000	1200
	Vibration sensor		80	2	160	160
	Light sensor		75 ~ 600	1	75	600
	RFID module, cards, key rings		2000	3	6000	6000
	temp sensors		250	5	1250	1500
	wires				3000	5000
	Speaker, buzzer			1	1500	1850
	Current, voltage sensor			10	3000	3800
	Amplifier			1	1500	2500
	Flame sensor		88	3	1575	2050

	Ultrasonic distance sensor (Sonar)		110	5	7500	8800
	Motion sensor			10	1025	1600
	dislay			1	2000	2300
	fingerprint sensor			3	5000	7500
BS electronics	Raspberry pi		3000 - 10000	1	3000	10000
	RFID module				1500	3000
	5- 10 inch touch display		5000 - 10000	1	5000	10000
	Voltage sensors			10	2500	3200
	Current sensors			10	3500	5000
				Electronics parts	**64645**	**100860**
Battery packs	ANT BMS	80A	8500	1		
	ANT BMS	40A	8000	1	25700	27000
	ANT BMS	40A	8000	1		
	Cable for BMS		1200	1		
	ESP 32			10	10000	12000
	RFID cards			5	4500	5500
	buzzer					
	temp sensor					
	18650 cells (china)	2500 mAh, Liitokala,	90000	2 carton (for 4 packs)	90000	97000
					Total	12000
Motor kit	72V 3000W		21000 ++		35000	35000
	60V 2000W		21001 ++		29000	29000

	48V 2000W		21002 ++		31000	31000
				Battery pack, motor, BMS	**225200**	**248500**
				total one time	**289845**	**349360**

In table 3.2, the pay expenses for the project are split down by their individual positions. Over a six-month period, the predicted salary-related expenses are estimated. However, some designations are interchangeable for certain months to cut down the costs.

Table 3.3: Project salary by Designation

Salaries			**HIGH**	**LOW**
	CTO		70000	70000
	Assistant (production)		15000	15000
	Mechatronics Engineer		20000	20000
	Software developer		15000	20000
	Power engineer		15000	20000
	Mechanical Engineer		20000	20000
	Industrial designer		30000	30000
	UI design (Intern)		5000	5000
	Assistant (Intern)		5000	5000
		Monthly cost (Salary)	**195000**	**205000**
		6 month duration	1170000	1230000

Chapter 4

Methodology

The goal of the project management methodology is to organise, coordinate, and standardize work processes. As a result, we are able to replicate effective components, learn from errors, and continually enhance all initiatives. In other words, a methodology is a great tool for boosting productivity as it is used. A technique, in terms of resources, aids in hastening the learning curve of the team and, when it is applied to projects, it is improved and modified to suit the distinct culture of the organization. With a flexible and uniform concentration, it is possible to lower implementation risks and improve the work. We decided to use two techniques to finish our EV project. One is for task management, the other is for project management.

- Waterfall model
- Sprint Planning

4.1 Waterfall model: The Waterfall technique is a conventional project management strategy. In this method, activities and stages are accomplished in a linear, sequential fashion, and each part of the project must be finished before the next can begin.

In general, the phases of waterfall project management occur in the following order:

- Requirements Analysis
- Design
- Implementation
- Testing
- Deployment

Like a real waterfall, progress flows in only one way.However, similar to an actual waterfall, this may rapidly become hazardous. Due to the fact that everything is predetermined, there is a great deal of space for mistakes if expectations do not meet reality. And once completed, there is no way to return to an earlier level.

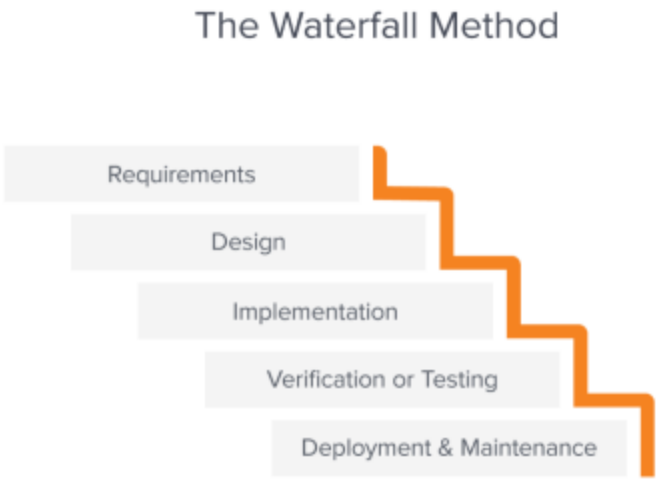

Figure-4.1: Waterfall Methodology

4.1.1 Requirements analysis

When I joined the company they already did the requirements analysis to a point. As the team had no hardware engineer we had to do the requirements analysis again. We breakdown the project in several parts

- Target market
- Industrial Design
- Software Design & Development
- Bike Electronics
- Battery Pack Design
- Battery charging and swapping station
- Cloud connection
- Plastic parts production
- Metal chassis production

For each part we did the requirement analysis to pull out the best ideas and solutions for the consumers.

4.1.2 Design

Product design is essential because it provides the consumer with an original and imaginative experience. As a result, the design of the product can attract new customers and foster brand loyalty. The design of a product may go a long way toward providing a memorable experience, which in turn fosters brand loyalty. Our product design team has

numerous tasks to execute in collaboration with other team members and according to their requirements. Some of the design tasks are listed below.

- Industrial Design depending on the target market
- Battery pack design
- Battery Station design
- Software Design
- Metal chassis design
- Plastic parts design

4.1.3 Implementation

To be on the safe side while working on a certain task, we purchased all necessary components and parts prior to implementation and sampled them separately. Motor, Fork, and Display are a few of our essential components that are yet to arrive. Moreover, implementation and testing are still ongoing using sprint planning.

4.1.4 Testing

Our test phrase consists of two steps. One is before beginning a given work, and the other is following its completion. Due to the fact that we work with sensors, microcontrollers, and the cloud, debugging becomes extremely difficult and complicated throughout the task itself. In pre-task testing, we evaluate individual components such as embedded devices, sensors, and microcontrollers to determine their pros and drawbacks, how efficiently they can be connected and programmed, and, most importantly, whether or not they are acceptable and appropriate for our project. After a task/feature has been done, the implementation phase begins, and we retest that task/function to identify its flaws and faults. After the task has passed all essential tests, we designate it as Done.

4.1.5 Deployment

After completing the Bike, Battery and Battery station we will need to go through some serious safety and security tests. Also we will have to test our system and software for improvements. After all this gets completed we will go for deployment. It will be another phrase. For which the company is already doing all the legal work which needs to be done to implement the EV ecosystem in Bangladesh. We will have the country's first electronics vehicle manufacturing facilities.

4.2 Sprint Planning: Sprint planning is intended to describe what can be provided within the sprint and how this work will be accomplished. The planning of sprints is performed in consultation with the entire team. Where Backlog is the problem that needs to be solved.In To Do, we keep the tasks organized so that the designers, developers, and engineers will take one card to solve and put it in the In Progress section with their names on it. When the task is

finished, the card will be moved to the Testing section, where it will be tested by the person and other associated individuals, and the card will be signed by the person who tasted it. After successfully testing the task, the task card will be moved to "Done." As there are multiple designers, developers, and engineers in the team the sprint planning is the best way to complete individual tasks.

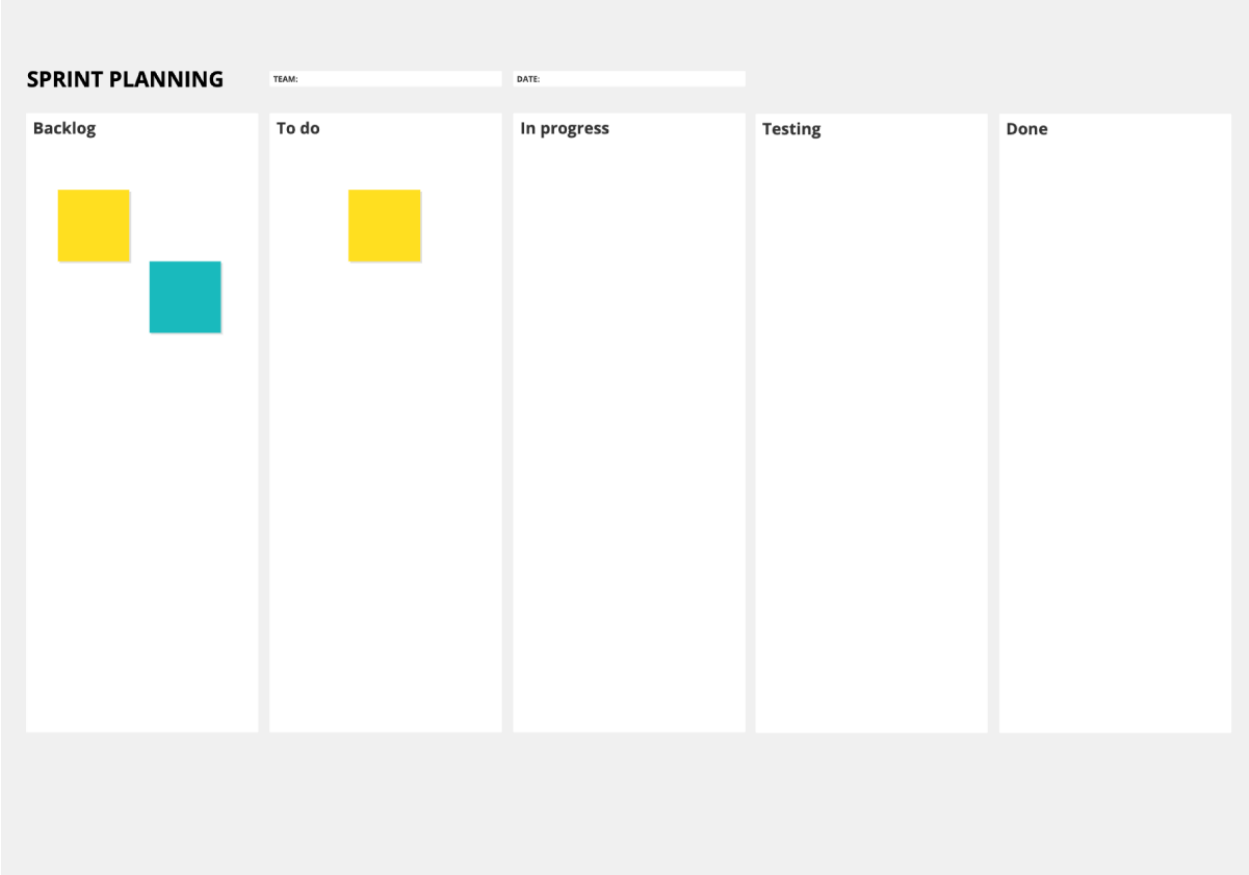

Figure-4.2: Sprint Planning

Chapter 5

Body of the Project

5.1 Work Description: I joined MotorX as a Mechatronics Engineer. And as per my rule in the company i had to take care of all the electronics parts. My work was divided into many parts.

- Background Research
- Project Planning
- Motor Kit selection
- Battery Pack development
- Battery Station planning
- Bike Electronics development
- Hardware to software communication

5.1.1 Background Research: Upon joining, I was assigned to do background studies on electric vehicles. First, the Super73 model was selected because it had the best match.

Understanding why we are doing this as a personal bike. One step lower, in Bangladesh, hardly anybody has a personal automobile. If you want to purchase a motorcycle, you'll need at least 1.5 lakh Taka. Like their gasoline counterparts, diesel motorcycles are difficult to control and quite powerful. Despite the high cost of gasoline, it is neither expensive nor energy-intensive. This is the objective, or the solution. We are transitioning to electricity. But one issue remains unresolved: refueling issues. We have now reached the switching technique. The maximum speed is restricted to 60 kilometers per hour for greater economy and a safer trip. Typically, in urban areas, greater than 50 is the safe threshold. The above is both inadvertent and lethal. Riding data, riding style data, and training data will soon be sent in real time through linked bikes. It will comprehend and anticipate the rider. Safe, affordable, and comfortable; an intelligent vehicle that comprehends the rider's needs. The Super 73 style is incompatible with battery switching. Now the battery is air-cooled, unisex, wet-reduced for mopping, and uses MS instead of aluminum due to differences in strain and stress curves. These two materials are very different. Wet strength is three times that of aluminum. But it doesn't shatter; it bends. Aluminum welding is both difficult and expensive. We may use an aluminum alloy in the future. MS is inexpensive and simple to make, and it does not bend readily. We find MS to be more balanced. MS tubes will be thinner than aluminum tubes since they are heavier than steel tubular chassis (used in automobiles) and plastic body components. 48 volts, 50–60 amps With a 2 or 3 KW hub motor and no chain, the frictional loss is minimal. Even if you don't know the weather, you can

track your bike with your app's camera in any situation. The anti-theft system will immediately email you images of your bike's current location. On the screen, intelligent recommendations appear, starting with the safest and most effective personalizer. Within the community. Reward and punishment systems will mold riders into decent individuals.

5.1.2 Project Planning: Project planning started with the bike electronics. We tried to add all possible features in our initial version. Features like anti theft, fall detection, built in wifi, controllable speaker etc. We also thought of having a futuristic lighting system. Then to maintain the timeline we simplified and categorized our works and created the initial Gantt chart. From where we break down the work into smaller tasks to follow the SCRUM method. And still in the meantime project planning changes as we are diving deep into this.

5.1.3 Motor Kit selection: There are two types of e-bike motors — mid-drive motors and hub-drive motors. Mid-drive motors are renowned for their superior performance and torque compared to conventional hub motors of comparable power. The fact that the mid-drive motor powers the crank instead of the wheel multiplies its power and enables it to take greater advantage of the gear system. Hub drive Ebikes incorporate an electric motor inside one of the wheel hubs. The hub motor replaces a conventional hub. Usually, the motor is situated in the rear although it can be installed in the front as well. The hub motor drives the wheel it is housed within. In other words, torque is directly applied to the wheel. A hub motor is insensitive to gear changes. Hub motors are by far the most prevalent form of ebike motor.

Table 5.1: Mid Drive eBikes: Pros and Cons

Pros	Cons
More range- Mid-drive ebikes have approximately 10 to 15 miles greater range than hub motor models.	More expensive- A good quality gearboxed Mid-drive ebikes start at around 80,000 BDT. Maintenance is also more expensive.
Better handling- The positioning of the motor improves the bike's handling as the motor weight stays in the middle of the front and rear wheels	Less reliable- Mid-drive motors have more moving parts inside the motor compartment. As an example: Gears, sensors, brakes and the motor itself.
Better performance- Mid-drive electric bicycles accelerate faster, climb more	More frequent maintenance- Because the motor is less reliable it requires more

efficiently, and have a higher top speed.	maintenance.
More efficient- The gear system makes it more efficient. It can increase speed by using gears while draining the same amount of power.	Initial Throttle: Mid drive motor has less initial throttle than Hub motors which makes the bike slow



Fig.5.1: A mid drive gear motor kit

Hub Drive eBikes:

Pros and Cons

Pros	Cons
Cheap: Hub motors are cheaper than Mid-drive motors. It starts around 40,000 BDT without the motor Kit.	Handling: Because of the motor placement, hub motor ebikes are rear-heavy which reduces handling efficiency.
Low Maintenance: As hub motors does have an additional gear box system in it, it requires low maintenance which saves a lot of money.	No gears- Hub motors don't have gears so it can't use its power for more top speed.
More Reliable: For low maintenance and also for easy maintenance hub motors are more reliable and budget friendly.	Range: Hum motors have less range. Also the monitor is heavier.
Regenerative Electricity: Some hub motors	

are able to turn speed into electricity for battery charging.	
Instant throttle: Hub motors have more instant throttle than a mid drive motor. Powerful hub motor can raise upto 60 km/h in just 5-6 seconds	



Fig.5.2: A Hub Motor Kit

For the first version MotorX has given importance to better performance, speed and initial power and choosed the hub motor kit. We might test different motors in future but for the MotorX X1 we have selected a 48V 3000W hub motor kit.

5.1.4 Battery Pack design and development: After finishing the initial design of the bike, we began work on the battery pack. And Fig 6.4(a) and (b) depict the fifth and seventh versions of our final battery pack's design, respectively. Our battery pack is a lithium-ion battery with 48V and 60Ah. Lithium ion batteries are the most costly batteries (per cell 3.7V, 2600mah). We provide a lithium ion battery with a 2.88 kwh capacity. The bike's range on a single charge is up to 90 kilometers. According to the e-bike simulator, the difference in speed between the 60v and 48v e-bikes is around 3 mph. This is a negligible difference considering the effort required to convert to the higher voltage. So, at least according to certain individuals we decided to go with the lower voltage EV means Lower voltage battery pack and lower voltage motor. Lower voltage battery will have more range as inside it will have more batteries in parallel which will store more energy and will be able to deliver more power in this 48v section.

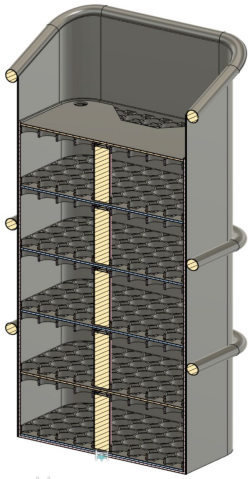

Fig 5.3: 5th version

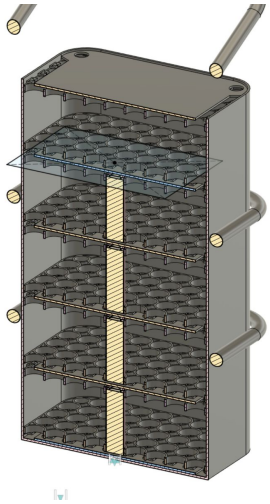

Fig 5.4: 7th version

The Li-ion battery pack requires a BMS(Battery Management System). A battery management system permits the monitoring of individual battery cells. As cells collaborate to release energy to the load, it is essential to keep the entire pack stable. A BMS enables continuous monitoring, data collection, and information transmission to an external interface so users may examine the state of each cell and the overall health of the battery pack. The BMS monitors and maintains a battery pack to prevent damage, extend its life, and keep it working within its safety limits. These functions are essential for efficiency, dependability, and security. From many models we chose Daly 13s 48V smart BMS. Fig 5.5 shows Daly BMS IO. It has UART communication protocol, Temperature sensor, Display port and Mobile application based bluetooth control system.

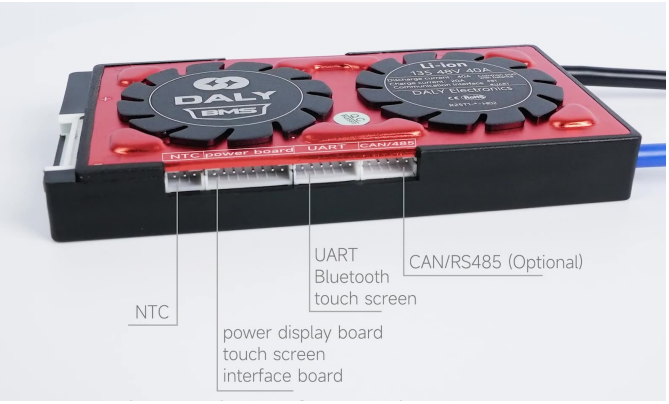

Fig 5.5 Daly BMS IO

To get battery data from the Daly Bms we have used UART communication protocol. For receiving data over UART we used an esp32 microcontroller. Fig 5.6 shows Daly BMS UART Communication with Esp32. ESP32 gets connected to daly bms using Tx and Rx pins. We also connect both GND(Ground) with another wire for signal stabilization.



Fig 5.6 Daly BMS UART Communication with Esp32

Esp32 receives data such as SOC(State of charge), Voltage, Current, Min & Max Cell Voltages, Min & Max Temp Sensor readings etc. The SOC, Voltage and Current are the most important of them as they will be transferred from battery to Motorbike and also from battery to Battery station. The SOC defines the amount of charge in the battery from which the bike will determine its range and battery capacity. When the battery is connected to BS for charging the SOC will define the current charging status from where the BS will calculate the cost of the full charge. Also all the battery data will be continuously updated to the cloud server to monitor each battery pack.

5.1.5 Battery Station planning: The BS will have many additional features apart from the Battery charging such as mobile charging, Touchscreen, User status, etc. First the user will put his battery to one of the empty battery holders. From where the BS will get Battery status such as SOC, voltage and ampere. When the battery is connected to BS for charging the SOC will define the current charging status from where the BS will calculate the cost of the full charge.

Charging cost = (Charging cost of 100% - SOC)

In the BS every cell will be charged to 100% so if any rider wants to swap his battery which has a SOC of 40%, the rider will be charged for the rest 60% charge cost. The BS will also get user information from the given battery pack and the total charging cost will be shown to the screen and to rider's mobile app from where he can make online payment.



Fig 5.7 Graphical view of a Battery Station

Fig 5.6 shows the Graphical view of a Battery Station where each station will have a storage of 20-30 battery packs.

5.1.6 Bike Electronics development: Bike electronics are divided into many sections. As it has many sensors and hardware configurations. Also the bike and battery station requires communication with a mobile app where the information travels through the firebase. Bike electronics and communications will be discussed in the product feature section.

5.2 System Analysis

5.2.1 Six Element Analysis

Process	**Human**	**Non Computing Hardware**	**Computing Hardware**	**Software**	**Database**	**Communication on Network**
Bike	Customer	Display, Lights, Hardware systems, Battery	MPU, Bike controller, BMS, ESP32 and Sensors	MotorX Mobile app, Arduino IDE	Local database and Firebase	Bluetooth and Wifi
Battery Pack	Customer, MotorX	Battery cells, Voltage shifter	BMS, ESP32 Node Mcu, Sensors	Arduino IDE, Mobile app	Firebase	Wired I2C, Bluetooth and Wifi
BS	Customer, MotorX	Battery charger, Display	Raspberry Pi, Sensors	Mobile app	Local database and Firebase	Wired I2C, Wifi
Bike Tracking	Customer	N/A	Mobile, ESP, Sensors	Mobile app	Firebase	WCDMA, Wifi
Bike Monitoring	Customer, MotorX	N/A	Mobile app, MPU, BMS, ESP32 and Sensors	Mobile app	Local database and Firebase	Bluetooth and Wifi
Access Control	Customer	Display	Mobile, MPU, ESP, Sensors	Mobile app	Local database and Firebase	Bluetooth and Wifi
Rear view camera	Customer	Display	Mobile app and ESP8266 camera	Mobile app	N/A	Wifi

5.2.2 Feasibility Analysis

A feasibility study is an evaluation that evaluates all significant aspects of a project, including economic, technical, legal, and scheduling concerns, to determine the likelihood of the project's successful completion. It is not limited to initiatives seeking to evaluate and estimate financial benefits. A feasibility study is a technique for assessing the viability and risk of a project. Before spending time and money on a project, a company may want to determine the likelihood of its success. Sometimes businesses want to know the prices of materials, in this case website modules, the amount of research that will be required, or even the marketability of a project, which in some cases is the most important factor, as in the case of Shanta Holdings, whose website generates crore taka in sales. Before devoting time and other resources to a project, firms must have a comprehensive understanding of their product's input costs. The choices about this project were ultimately based on feasibility studies.

1. Technical Feasibility:

In the last decade, technological and material science advancements, increases in ride comfort and convenience, and, most crucially, an increased awareness of the risks of climate change have all contributed to the increasing popularity of these electric commuter cars.The most modern battery switching technology in the world, automobiles are recharged in few minutes. Advanced new battery,swapping stations, and bike monitoring for mobile application sharing are being created, and the country's capacity to integrate these systems is backed by historical data. The most expensive batteries are lithium ion batteries (per cell 3.7V, 18650 mah). This project is technically feasible since all of the required hardware, software, and other technical requirements are already in place.

2. Economic Feasibility:

This analysis is conducted to assess the project's cost and benefit. A complete cost proposal for hardware design, including cost breakdowns, was developed. This expenditure is then balanced against the company's financial benefit. More internet presence implies more income. The pricing of our e-bike should not be set at this time. However, when we release the e-bike into the market, the pricing should be flexible. In the process of my studies on the global market, i will learn essentially the same things that are given below:



` Fig.5.8: E-bike market size, 2020 to 2030 (USD Billion)[5]

Fig 5.1 shows the global e-bike market size was valued at USD 18.86 billion in 2022 and is expected to reach over USD 40.98 billion by 2030, poised to grow at a compound annual growth rate (CAGR) of 10% from 2022 and 2030[5].

Table 5.2: E-bike Market Share, By Battery Type, 2020 (%)[5]

Battery Type Segment	2020 (%)
Lithium-ion	30.83%
Nickel Metal Hydride (NiMH)	20.02%
Lead Acid	46.41%
Others	2.75%

Table 5.3: Global E-bike Market Revenue (USD Million) and Growth Rate Comparison by Battery Type (2017-2030)[5]

Battery Type	2017	2020	2030	CAGR (2020-30)
Lithium-ion	4,036.8	5,062.5	13,366.9	10.20%
Nickel Metal Hydride (NiMH)	2,727.1	3,286.7	7,618.6	8.77%
Lead Acid	6,185.7	7,620.4	18,927.2	9.52%
Others	362.9	451.2	1,075.7	9.08%
Total	13,312.5	16,420.8	40,988.4	9.58%

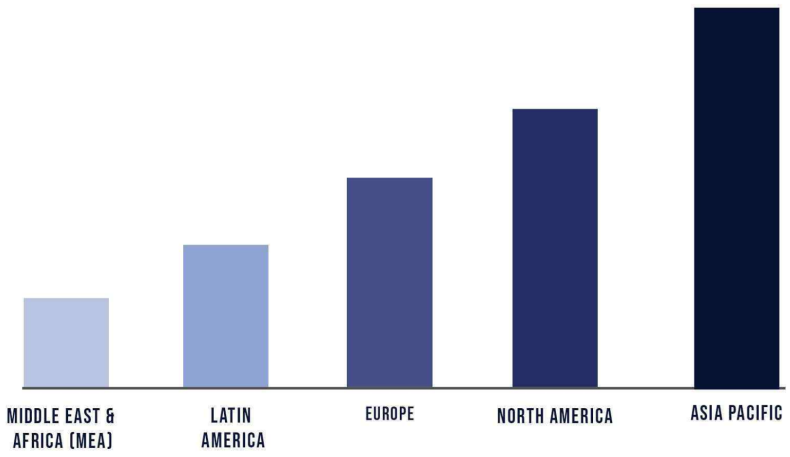

Fig.5.9: E-bike market share by region, 2020(%)[5]

3. Legal Feasibility:

According to Section 2.1 of the proposed Electric Motor Vehicle Registration and Traffic Regulations 2021, no license is required to operate an electric bike in Bangladesh. In 2022. Walton e-bike is the first product of its kind in Bangladesh to get BRTA clearance.This means that users can ride an electric bike on the streets without any formal issues and MotorX is also in the process of registering their EV Ecosystem and getting clearance from BRTA and other related Gov. regulators.

4. Operational Feasibility:

The components of an e-bike include a battery, motor, throttle, and controller. In addition, the battery and motor are two of the most important aspects of an electric bicycle. Initially, we used a 48V, 2 kW BLDC motor. The electric bike is powered by a 48V, 60Ah lithium-ion battery. When a rider cranks the throttle on the handlebars, the controller instructs the battery to provide power to the hub-mounted motor. This energy is used by the engine to turn the gear, which moves the wheels of the electric scooter forward. We supply a lithium ion-based battery with a capacity of 2.88 kwh that is based on innovative technology. The bike has a range of up to 90 kilometers on a single charge. The bike's top speed is 60 kilometers per hour. Bangladesh will benefit the most from the amazing transition of urban transportation and energy infrastructure to smarter, greener, and safer electric power. MotorX is presenting its revolutionary battery switching technology in Bangladesh to develop a new generation of proven, safe, and dependable electric two-wheel mobility. We provide more than fifty battery swapping stations. We aim to establish battery switching stations in Bangladesh at Abdullapur Bus terminal, House Building in Uttara, Rajlokkhi in Uttara, and close to the Airport train station. Other locations include Bashundhara Gate, North Badda, Rampura, Motijheel, Moghbazar, Banani, and Dhanmondi.

5. Schedule Feasibility:

This is the most important evaluation for project success. In scheduling feasibility, we estimate the time required to complete a project, which in this instance is eight months working days with considerable flexibility. The project will be completed on schedule as specified milestones are being met on time.

5.2.3 Problem Solution Analysis

When I started my internship program I was given instructions of my responsibilities. Where it was clearly mentioned that I must work with different systems , sensors and microcontrollers which requires Research and Problem solving skills. As I mentioned earlier I

had prior knowledge in Embedded systems and IoT. I also did some research based projects before my internship and published a paper so in the beginning I took it very lightly. As I had no prior experience working in industries or with industrial grade sensors and systems it became difficult. When I understood this fact I started conducting research on them and I learned a lot and also solved many problems. I also learned business documentation techniques. This internship opportunity also taught me how to make ideas from idea to product. This lesson and connections to my company led us to open a new company for Home and Industry Automation. We named the company “FLOW Technologies”.

5.2.4 Effect and Constraints Analysis

An electric motorbike, or e-motorbike, is a type of motorcycle that is powered by an electric motor instead of a traditional internal combustion engine. These vehicles have several benefits over their gasoline-powered counterparts, including improved efficiency, lower emissions, and reduced noise pollution.

One of the main effects of e-motorbikes is their environmental impact. Compared to gasoline-powered motorbikes, e-motorbikes produce zero emissions and significantly lower noise pollution, making them a more sustainable and environmentally friendly transportation option. Additionally, e-motorbikes are more energy-efficient, which can reduce dependence on fossil fuels and lower greenhouse gas emissions.

Another effect of e-motorbikes is the potential to improve air quality in urban areas. Gasoline-powered motorbikes are a significant source of air pollution in many cities and switching to e-motorbikes could help to reduce the levels of harmful pollutants in the air.

On the other hand, e-motorbikes also have certain constraints, one of the main constraints is their limited range compared to gasoline-powered motorbikes. Electric motorbikes typically have a range of around 60-100 miles per charge, whereas gasoline-powered motorbikes can travel for hundreds of miles on a single tank of fuel. This constraint makes them less convenient for long-distance travel and could limit their adoption in some areas.

Another constraint is the cost of e-motorbikes, which is generally higher than that of gasoline-powered motorbikes. This can make e-motorbikes less accessible to some consumers, particularly in developing countries where the cost of electric vehicles is even more prohibitive. Additionally, the lack of charging infrastructure in some areas can also make it difficult to charge an e-motorbike, limiting its adoption.

5.3 System Design

5.3.1 Rich Picture

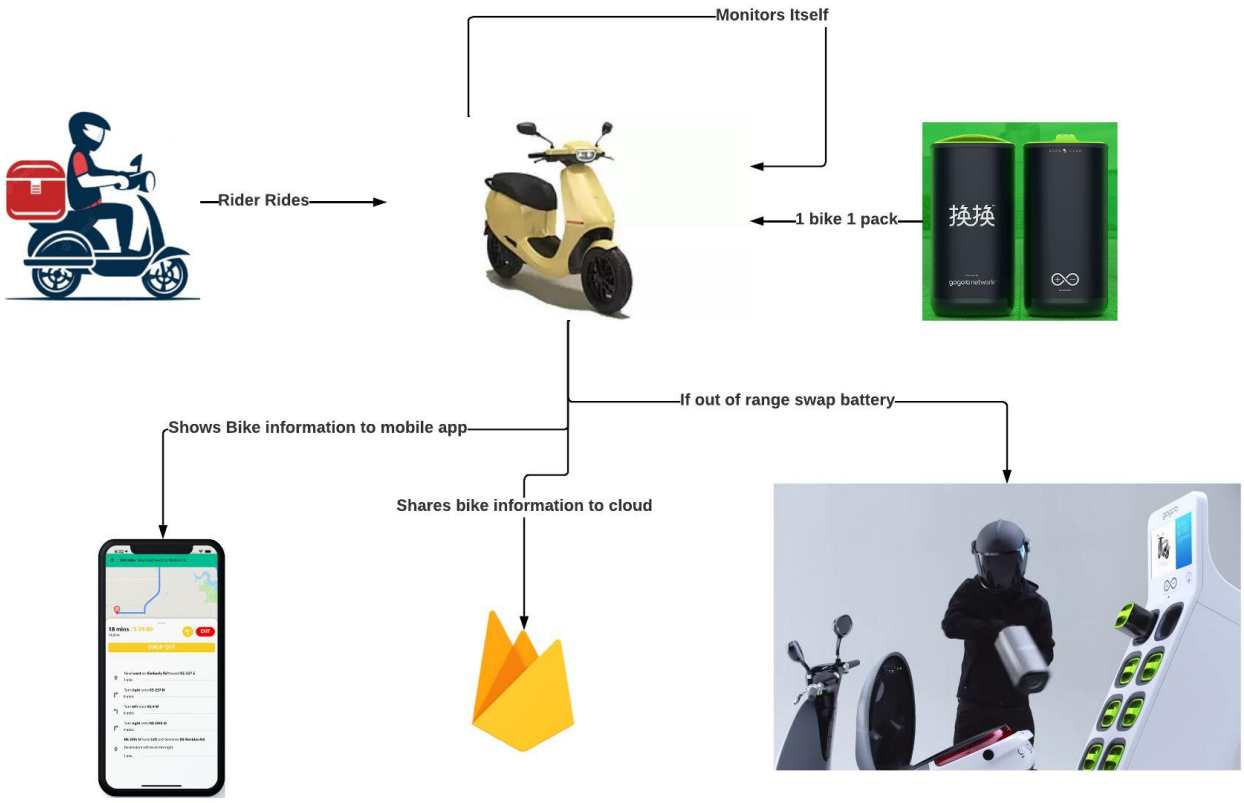

Fig.5.10: Rich Picture

5.3.2 UML Diagrams

Fall Detection:

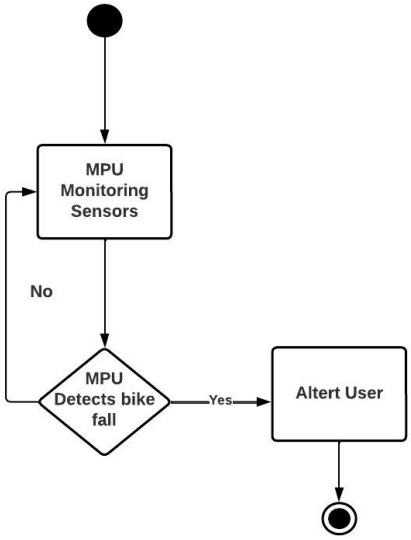

Fig.5.11: Fall Detection System

Accident Detection:

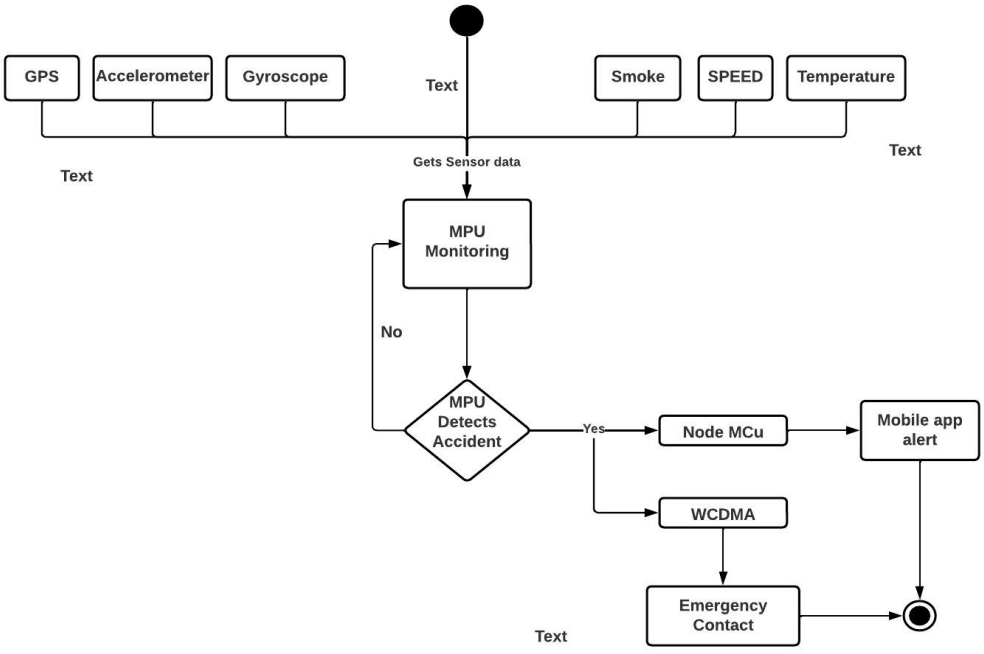

Fig.5.12: Accident detection system

Tracking System:

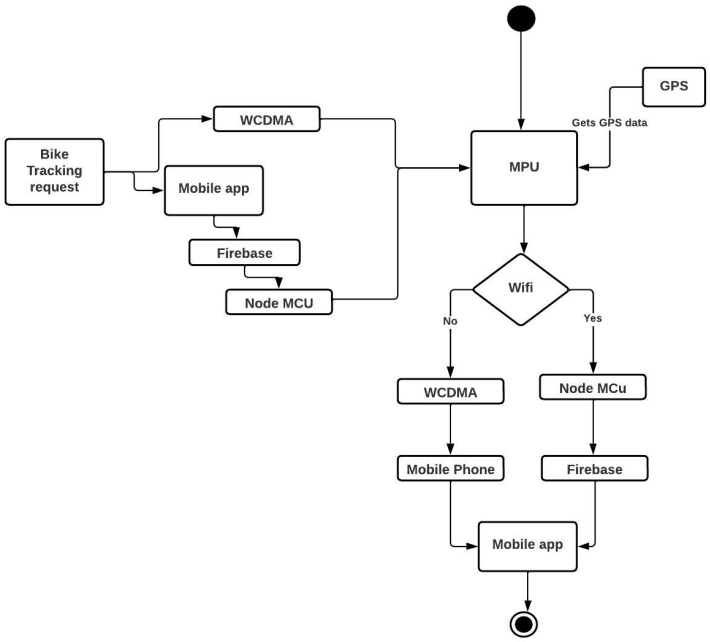

Fig.5.13: Tracking system

Anti theft system:

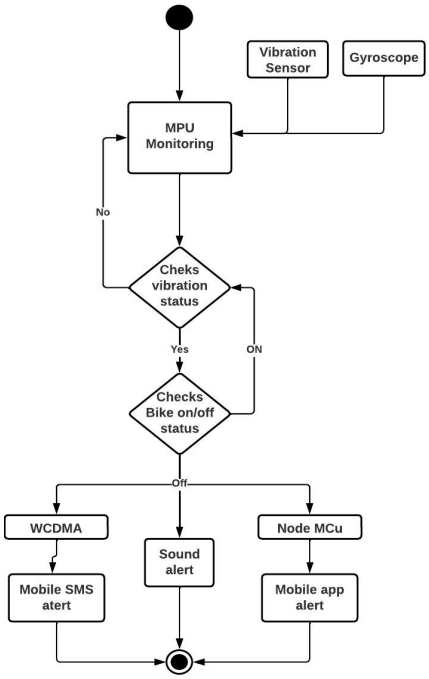

Fig 5.14: Anti theft system

Access control system:

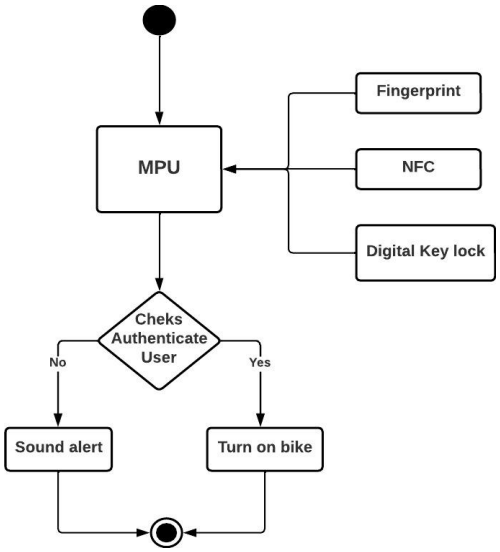

Fig 5.15: Access control system

Bike monitoring system:

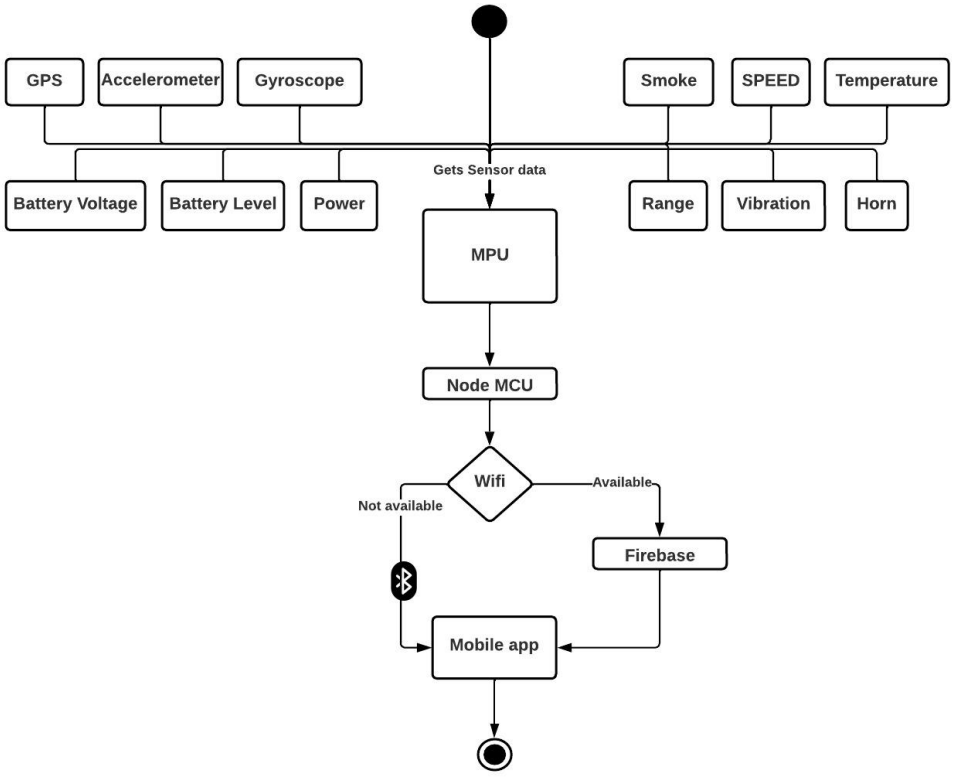

Fig 5.16: Bike monitoring system

Rear view camera:

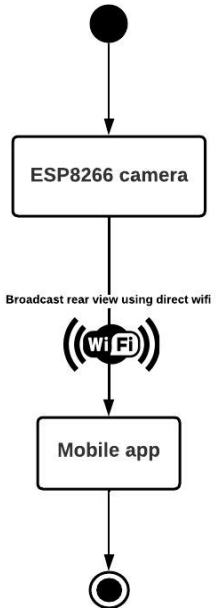

Fig 5.17: Rear camera view

Communication with Mobile app:

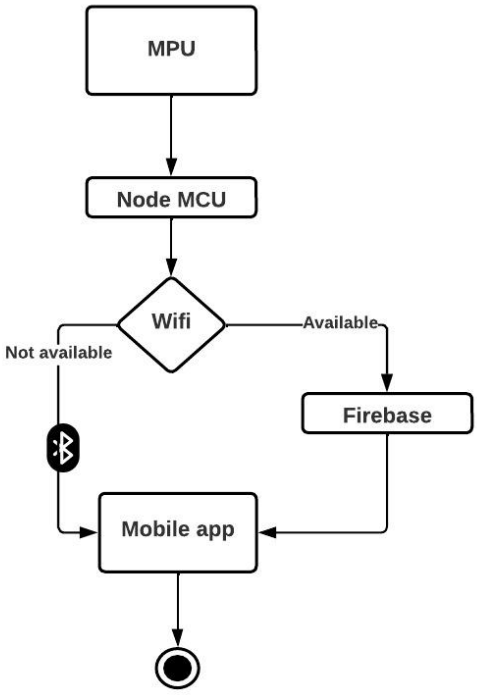

Fig 5.18: Communication with mobile app

5.4 Product Features

A. Fall Detection
B. Accident Detection
C. Tracking System
D. Anti theft system
E. Access control system
F. Bike monitoring system
G. Rear view camera
H. Hardware to Software communication

A. Fall Detection: The fall detection system is made with a Gyroscope sensor (MPU6050), MPU(Main processing Unit- Arduino mega), ESP32, RTC..

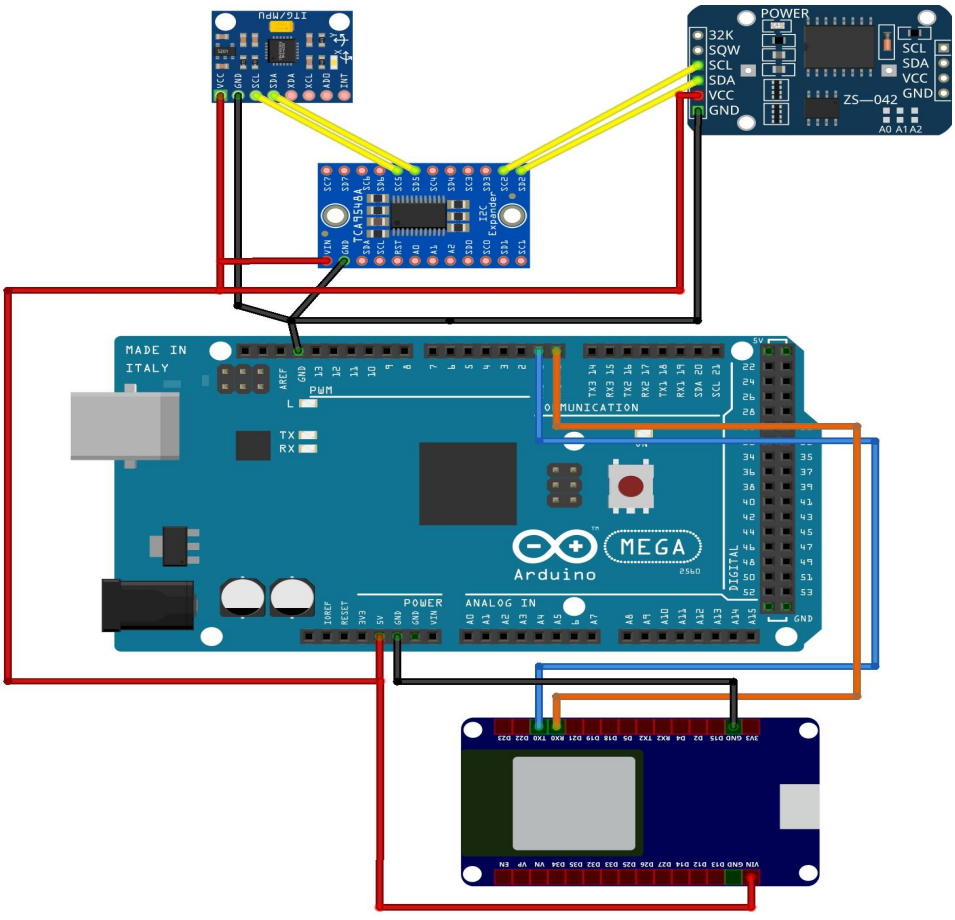

Fig 5.19: Schematics of Fall Detection System

B. Accident Detection: In the accident detection system Accelerometer and Gyroscope sensor(MPU6050), GPS, GSRM and ESP32 and MPU has been used.

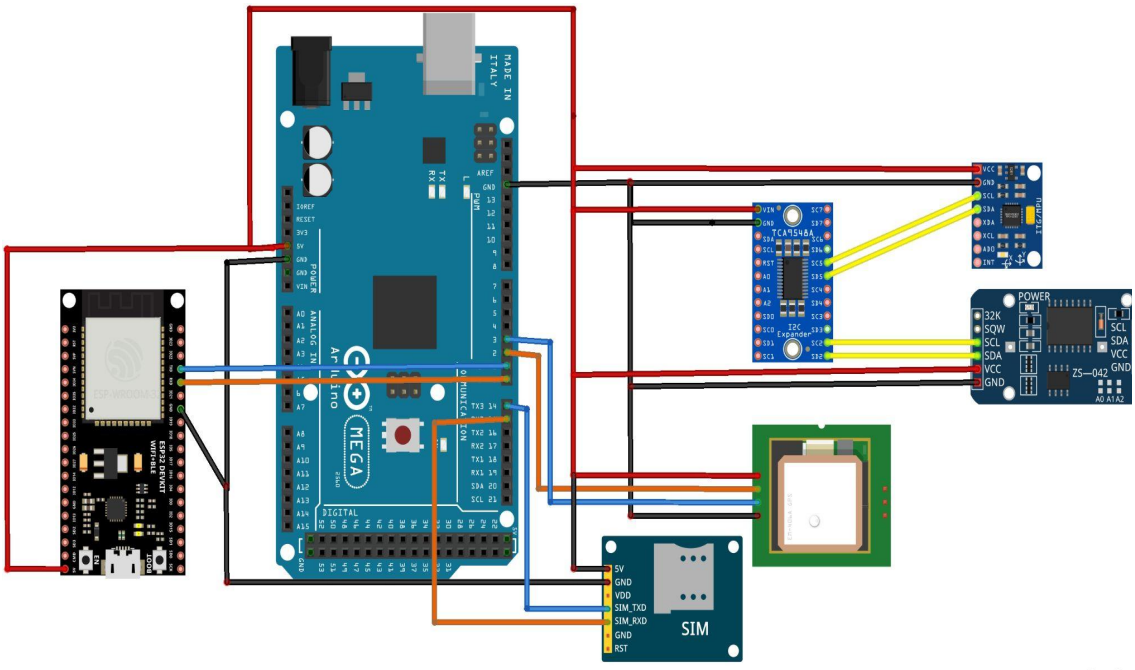

Fig 5.20: Schematics of Accident detection system

C. Tracking System: Tracking system works by using GSRM and GPS module.

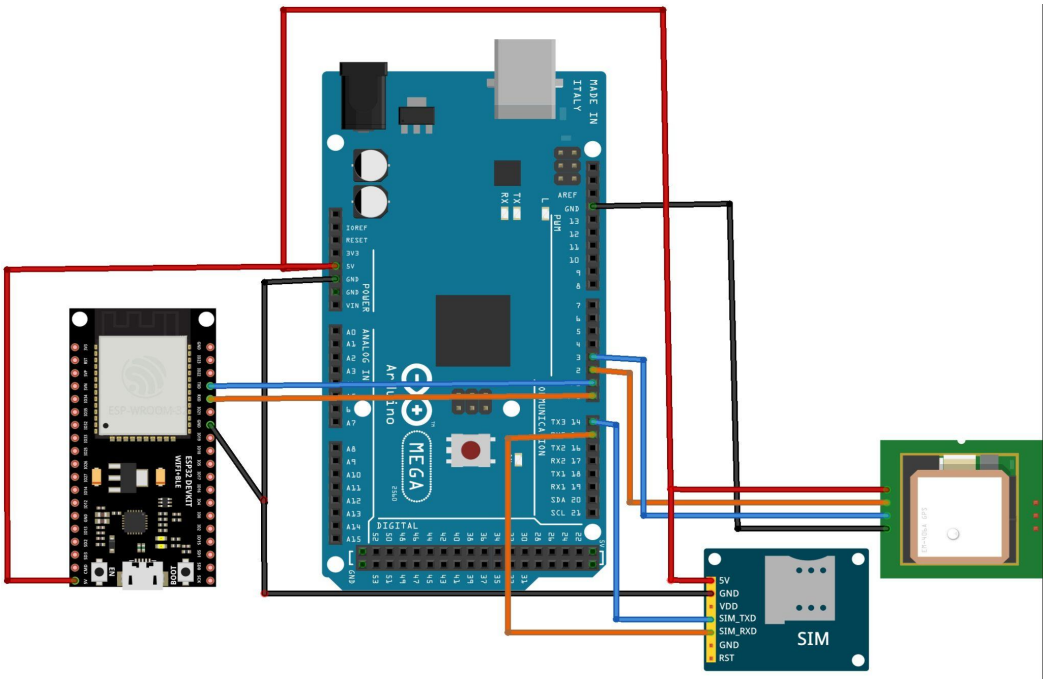

Fig 5.21: Schematics of Tracking system

D. Anti theft system: Anti theft system monitors the bike when its in lock mode to notify user about unexpected events. Where along with the GPS and GSRM, Viration sensor and Sound system has been used.

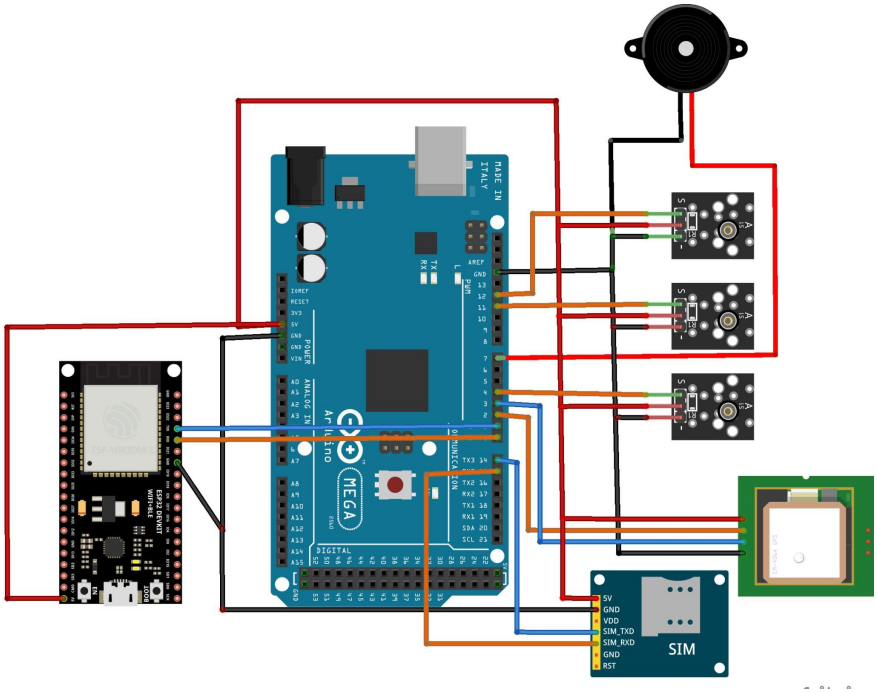

Fig 5.22: Schematics of Anti theft system

E. Access control system: Access control system enables user to access the bike. It uses Fingerprint and NFC readed to identify authentic user.

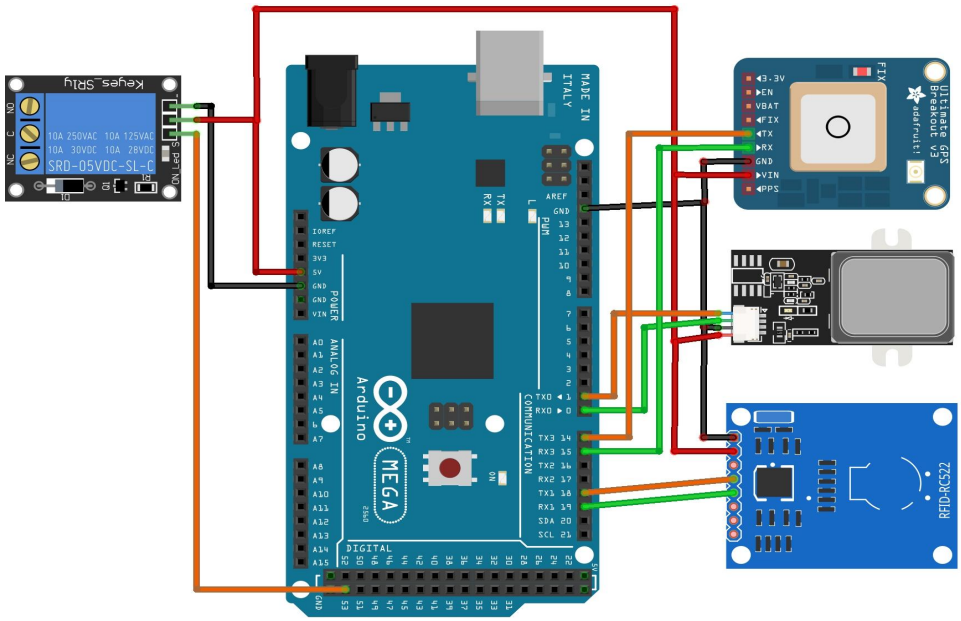

Fig 5.23: Schematics of Access control system

F. Bike monitoring system: Bike monitoring system is the most important of them, The MPU monitors every sensors and gets data from every module of the bike then through ESP32 it forwards the data to the cloud and if public or private wifi is not available it shares all the data with the mobile app through Bluetooth then from the Mobile app the data gets to the server.

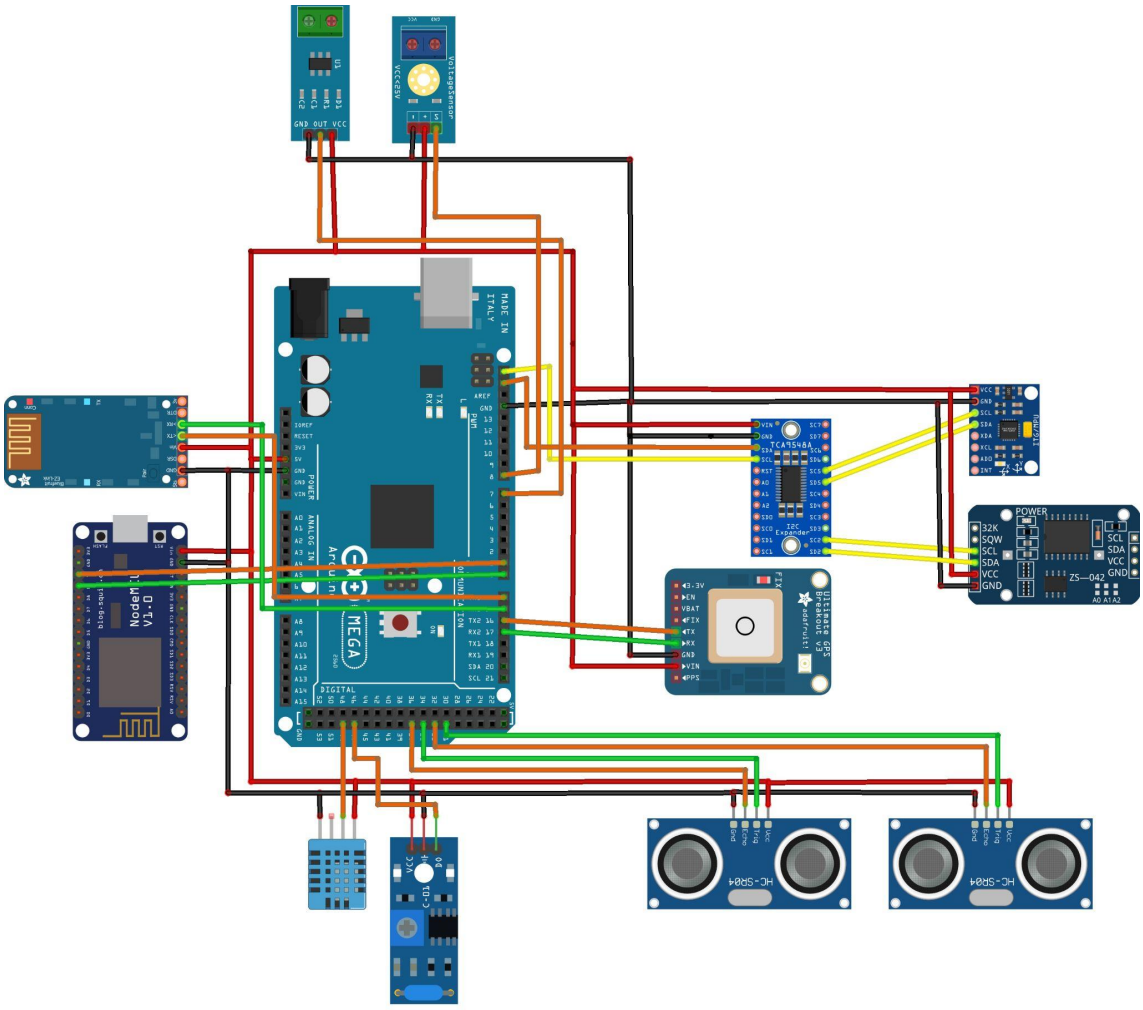

Fig 5.24: Schematics of Bike monitoring system

G. Rear view camera: ESP32 Camera module has been implemented to get the real camera view in the mobile app.

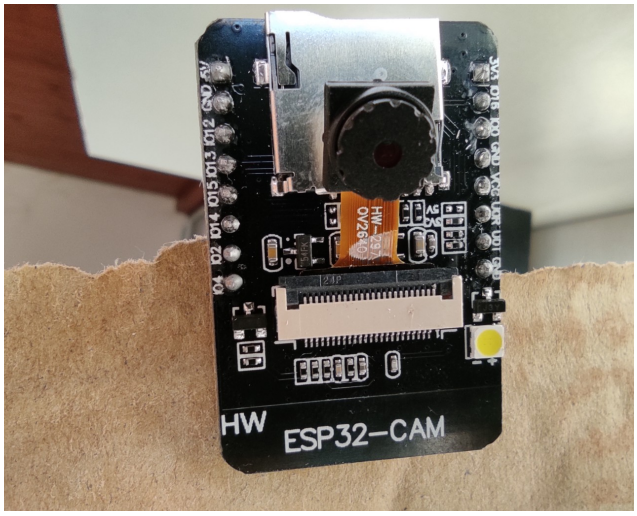

Fig 5.25: ESP32 CAM Rear camera

H. Hardware to software communication: Hardware data goes to cloud through Wifi and through Bluetooth Mobile app receives all necessary data..

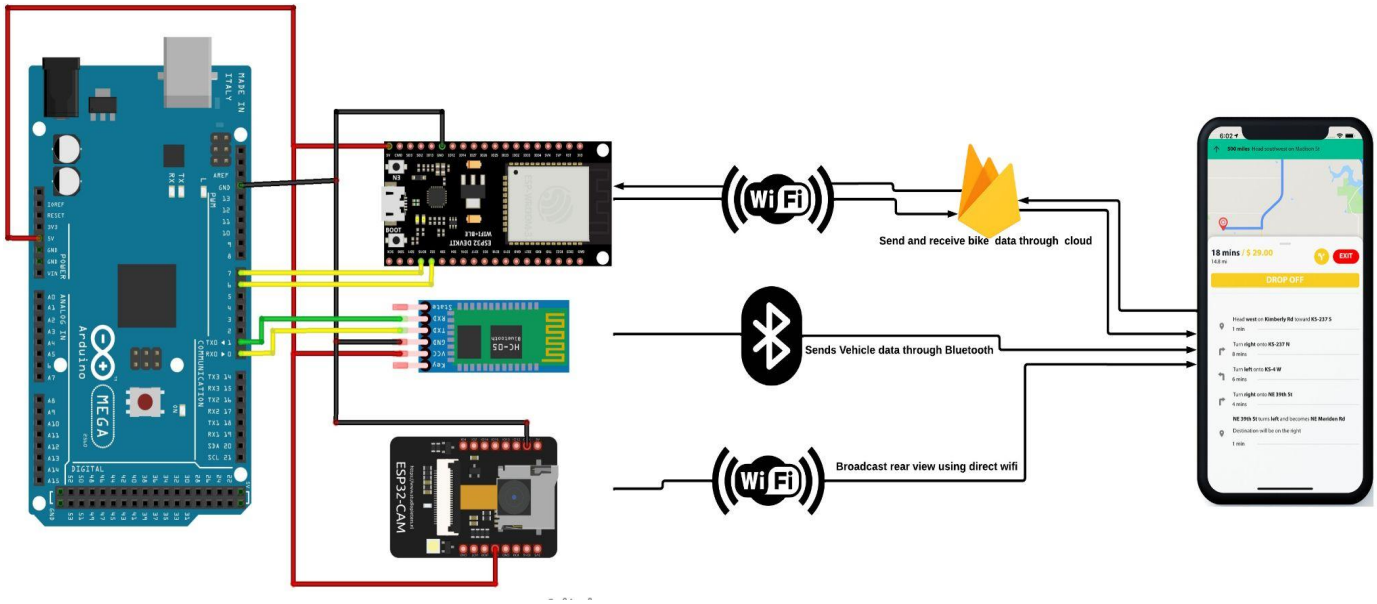

Fig 5.26: Schematics of Mobile app communication

Chapter 6

Results & Analysis

6.1 First prototype development:

Multiple meetings were held from the outset to discuss the design of the motorcycle. There were numerous options, and it was challenging to come up with a single design concept. Prior to my joining the firm, the Super73 design had already been selected for use. Its cafe racer design, which is ideal for integrating a swappable battery system, and its compact proportions led to the selection of Super73 as the best match.



Fig.6.1: Design of Super73

Super 73 style doesn't work with battery swapping. Now the battery is under the seat, air cooled, using ms instead of aluminum, because of strain, stress curve difference. But after making our initial prototype we found that the design and structure does not match our Target market. Then we researched about motorbike design.



Fig.6.2: Our first prototype

6.2 Final Product development:



Fig.6.3: Design of Honda super cub 2022

In figure 6.3 show the design of honda super cub. Since 1958, Honda Supercub has been the best-selling road vehicle of all time.

It is likely to be closer to 110-120 million in 2022, and it is safe to state that Fujisawa and Honda's goal of creating a mass-market product that would leave an indelible impact on history has been achieved 100 million times over and this became our inspiration.

We finally settled on our design. And the designing team began working on it. We devoted the first week to constructing the primary structure and selecting numerous battery storage locations. And Fig 6.4(a) and (b) represent the fifth and eleventh design versions of our final product.



Fig.6.4(a): 5th Version

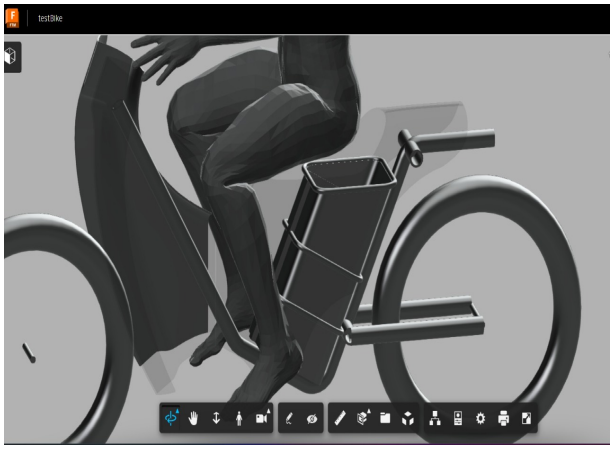

Fig.6.4(b): 11th version

Fig.6.4: Final product design with weight

Whereas in Fig. 6.4 we just produced a human model to evaluate the outside structure, in Fig. 6.4 we developed a human-like robot. Then, up to figure 6.4, there were modifications, and an initial space for the battery pack was added.

Figure 6.5 is our fifteenth version. Where human model testing has been effective. In addition, we determined the optimal placement for the battery pack. It also displays the design of the metal body, to which we added space for electrical components in subsequent generations. Our final version also has storage space and so many more interesting features.

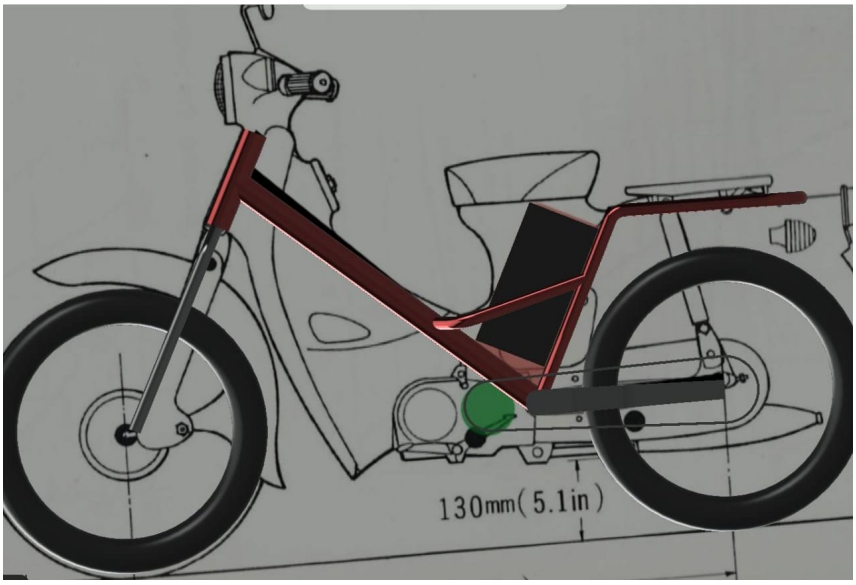

Fig.6.5: Final product design (V15)

6.3 Battery Pack Design

With an increase in speed, a greater proportion of the e-energy bike's is used to battle wind resistance. But if you can find out how to lower the coefficient of drag, the 60v e-bike will allow you to reach higher speeds than the 48v model. With the additional voltage, you may also obtain an increase in range. 48v is the most prevalent voltage in e-bikes due to its ideal power-to-cost ratio, although 60v and 72v are likely to expand due to the need for speed. There are several techniques to boost the speed of your 60v or 48v e-bike, such as inflating the tires. On smooth roads, inflated tires minimize rolling resistance and increase your speed. However, the tougher tires will not buffer your ride against road imperfections.



Fig.6.7: A single layer of MotorX's battery pack

Fig 6.7 shows a single layer of our battery pack. The battery pack has a total of 5 layers. It also has other electronics components such as BMS, ESP32, Voltage and Current sensor. To communicate with the bike and Battery station.

Our battery capacity is 48V, 60Ah
In a single charge it will run around 100Km (Expected, Depends on bike's final weight)
Per KWH electricity price in Bangladesh is Tk 9.24(Commercial).

Total electricity consumed per charge = 48V × 60Ah
= 2880 Wh
~ 2.880 KWh

Total cost of a full charge: (2.88 Unit × 9.24) = 26.67 Tk ~ 27 Tk

Per Km electricity cost: 27/100 = 0.27 TK (Twenty-seven Poisha ONLY)

Petrol bike costs around 4.3Tk per Km. Also Electric bikes require low maintenance as they have fewer mechanical complicated parts which are economically and environmentally friendly.

Chapter 7

Project as Engineering Problem Analysis

7.1 Sustainability of the Project/Work

More than a fifth of the CO2 emissions in our nation are caused by our movement. Riding an e-bike helps to lower this value because it enables us to reduce traffic and its impact on the environment. E-bikes require little space and don't create noise or exhaust fumes. The switch is a win for the environment. And therefore for every one of us.

In order to ensure sustainability, mobility and the environment must work together. The transportation industry has a significant impact on how stable the environment is for the environment. in defining the stability of the green environment plays a significant role. Our engineers have created a technological advancement that will help our nation's problems. Today, there are tens of thousands of e-bike producers worldwide, and consumers can choose from an increasing selection of electric bikes. Walton received our country's first BRTA-approved e-bike. We are making some different features for our e-bike production, and it will revolutionize change in the country.

The total number of vehicles passed in 1 hour was multiplied by the CO2 emission factors (Table 1) to determine the CO2 emission per kilometer from public and private transportation. From these figures for various transportation modes, the per person emission was computed (Eq. 1). Finally, Eq. 2 revealed the total CO2 output from either the private or public mode. This study made the assumption that an ebike produces no emissions while being used[6].

Table 7.1: Emission factors for commonly used vehicle in Dhaka city, Bangladesh[6]

Transportation mood	Fuel type	CO2 emission factor (kg/km)
Car	CNG	0.24
	Petrol	0.26
Microbus	CNG	0.3
Motorcycle	Petrol	0.04

Auto rickshaw	CNG	0.08
Laguna	CNG	0.3
Bus	CNG	0.97
	Diesel	0.89
Minibus	Minibus	0.73
	Diesel	0.67
Double-decker bus	CNG	0.97

CO_2 emission per person=(Number of vehicles∗CO_2 Emission factor) / Number of people….(1)

Total CO_2 emission from private or public mode = CO_2 emission per person * Total number of people traveled by private or public mode ……(2)

Is battery production of lithium sustainable?

The production of lithium is comparable to the production of other metals. The release of harmful compounds during this process is offset by the reduction in CO_2 emissions resulting from the increased use of e-bikes over cars. Consequently, the manufacturing is generally considered to be sustainable[6].

7.2 Social and Environmental Effects and Analysis

The use of electric vehicles (EVs) has the potential to have a significant impact on both social and environmental factors.

The ability to lessen reliance on fossil fuels and minimize air pollution is one of the major societal implications of EVs. Public health may benefit from this, especially in cities where air pollution is a big problem. Additionally, the production and upkeep of the vehicles and their charging infrastructure could result in new jobs due to the use of EVs[8].

Compared to conventional gasoline-powered vehicles, using EVs can significantly cut greenhouse gas emissions and air pollution. This can enhance air quality and lessen the effects of

climate change. Additionally, EVs can lessen reliance on foreign energy and the negative environmental effects associated with the extraction and transportation of fossil fuels.

There are, however, a few possible adverse effects to take into account. The mining and disposal of the materials used in the batteries can have a severe impact on the environment, as can the production of EVs and the batteries that power them. The need for more electricity to power the vehicles may also increase the need for more fossil fuels to provide that electricity[8].

Overall, EVs certainly have the potential to positively affect social and environmental variables, but in order to completely appreciate their influence, it is crucial to take into account the entire lifecycle of the cars, from manufacture to disposal. It is also essential to have a strategy for boosting the production of renewable energy and reducing reliance on fossil fuels.

Electric vehicles are significantly more expensive than gasoline-powered vehicles, which can make it difficult for certain individuals to purchase one. This is another factor to take into account. This could worsen social and economic inequality by making EVs more affordable mainly for the wealthy.

The adoption of EVs may also be constrained by some areas' poor infrastructure for charging, particularly in low-income and rural locations. This demonstrates the importance of making investments in the infrastructure for charging EVs so that everyone can take use of their advantages[8].

In conclusion, using electric vehicles has the potential to improve social and environmental aspects. To fully exploit these advantages, it is crucial to take into account the entire lifecycle of the vehicles and to invest in charging infrastructure and renewable energy sources. Additionally, in order to make EVs accessible to everyone, it is critical to address the high cost of EVs and the lack of a charging infrastructure in some locations.

7.3 Addressing Ethics and Ethical Issues

Data is a valuable asset that any business develops, acquires, stores, and trades. A corporation is protected against financial loss, reputational injury, a loss in consumer trust, and brand erosion by preventing internal or external corruption and illegal access. Today, data can be measured at a greater cost than patrol. The amount of data traversing the network across Cloud and data center environments has increased rapidly. Consequently, Cloud Data Security and data center security come into play. The Economist states that we are currently living in the "zettabyte age." Managing and securing the transfer of sensitive or personal information at every known location is the most appropriate action given the volume of traffic generated. In MotorX we are also so concerned about our user data. As we have three entities to our system

- Motor Bike
- Battery Station
- Battery
- Mobile App

We will be pulling data from every mentioned entity. Most of the data will be from the motor bike. We will collect every vehicle status such as Bike performance and usages to create a user friendly environment for our consumers.

Chapter 8

Lesson Learned

8.1 Problems Faced During this Period

Working on the EV ecosystem was tougher than I thought, especially for me who has a Computer science and engineering background. I had to obtain more knowledge in Electronics and embedded systems programming. Every Week I was assigned to solve a new task. There were sensors, embedded systems, microcontrollers etc. Also I had to learn a lot about bikes and Battery systems. I also had to give input to the designing team. I was a full time employee, 9.00AM to 5.00PM was my reporting time but so many times we had to work till 9.00PM. Even on weekends we also worked. Most of the difficulties were in designing the motorbike as there were several different parts which had different measurements. Also choosing the right components was tough as there were many companies. One of the toughest problems I faced during the project was getting Battery management system (BMS) data to the battery microcontroller to store and send battery data in need. I had spent 5 days straight to understand the UART communication protocol of BMS and get data from it. But because of a lack of resources connecting the BMS with a microcontroller I couldn't complete it on my own. After spending almost a week we took expert help to make that work.

Additionally, it was challenging to learn so many new technologies in a short amount of time, as well as to fit in with the other engineers and operate as a team. Every project at this place has extremely strict deadlines for each section. It was quite difficult to meet those deadlines and understand the additional features at the same time. Additionally, studying and putting the knowledge into practice in such a short amount of time was incredibly challenging. Trying to keep up with the team's experienced engineers' quick pace was exhausting.

8.2 Solutions to the problems

For choosing the right components we first tested different modules to know which one is perfect for our project. For an example we have tested 3 GPS modules to test as GPS is one the most important features for the Bike monitoring system, Anti theft and Bike tracking system. Also we used different microcontrollers to choose the right one. Likewise to connect the bike with the mobile app we needed wifi and bluetooth. First we used ESP8266 Node Mcu which has a ESP8266 wifi chip and to communicate with bluetooth we used HC-05 bluetooth module. But finally we used ESP32 Node mcu which has a ESP32 microcontroller inbuilt bluetooth and wifi. Which reduced our time and communication protocol with the mobile app. In the early time planning the project was getting tough. It was because there were different engineers for different tasks but all those tasks were interrelated. So we decided to break the project into smaller pieces and use the SPRINT Planning method to solve each piece of the problem. Where in a specific problem required engineers and developers is assigned to complete that task. The SPRINT planning helped a lot to maintain our timeline.

Chapter 9

Future Work & Conclusion

9.1 Conclusion

Working with MotorX was an incredible experience. I met so many amazing people from different fields on this journey. I learned a lot throughout my internship and hopefully will keep this learning thing going on. Faced so many problems in this journey as my rule includes collaborative knowledge of multiple fields. I got help from my mentors and also from my co-workers as well. I Learned how to solve a problem, and learned the proper way of doing research. I especially want to thank my CTO, he was really helpful during my work. This internship has given me the opportunity to learn more about the Electric vehicle environment and its market. I also learned the proper way of communicating and making an idea into a business model.

9.2 Future Works

Rongdhonu Group has a long term plan to create an Automobile industry in Bangladesh and they started with motorX with the vision to make Bangladesh ready for future electric vehicle revolution. Where they have plans to use their same structured battery to their electric car also. This will create a huge impact in the EV ecosystem in Bangladesh because there will be battery stations all over the country and because of swappable batteries consumers won't have to think about long charging time and range anymore.

Bibliography

[1] L. Bicycle, “E-Bike History: 4 Historical Echoes — Shop Leeds Bikes— leedsbikes.com.” https://leedsbikes.com/electric-bike-reports/electric-bike-history-4-historical-echoes-powering-todays-bicycles/. [Accessed 13-Dec-2022].

[2] “The History of Ebikes — radpowerbikes.com.” https://www.radpowerbikes.com/blogs/the-scenic-route/the-history-of-ebikes. [Accessed 14-Dec-2022].

[3] I. Fried, “Former HTC Executive Raises Huge War Chest to Launch Gogoro,a Smart City Startup — vox.com.”https://www.vox.com/2014/10/30/11632448/former-htc-exec-raises-huge-war-chest-to-launch-gogoro-a-smart-city. [Accessed 17-Dec-2022].

[4] “Gogoro Aims For Battery-Swapping Standards With Gogoro Network — rideapart.com.” https://www.rideapart.com/news/361449/gogoro-network-battery-swapping-standards-push/.[Accessed 18-Dec-2022].

[5] “E-bike Market Size, Trends, Growth, Report 2022-2030 — precedenceresearch.com.”https://www.precedenceresearch.com/e-bike-market. [Accessed 25-Dec-2022].

[6] Z. Wadud and T. Khan, “Cng conversion of motor vehicles in dhaka: Valuation of the cobenefits,” in transportation research board (TRB) 90th annual meeting was held in Washington,DC, 2011.

[7] “Gogoro - Wikipedia — en.wikipedia.org.” https://en.wikipedia.org/wiki/Gogoro. [Accessed 28-Dec-2022].

[8] C. Ma, L. Madaniyazi, and Y. Xie, “Impact of the electric vehicle policies on environment and health in the beijing–tianjin–hebei region,” International journal of environmental research and public health, vol. 18, no. 2, p. 623, 2021.

[9] https://www.risingbd.com. Country’s first BRTA approved Walton e-bike hits market, per km cost 10-15paisa---risingbd.com.https://www.risingbd.com/english/business/news/91628#:~:text=Walton%20e%2Dbike%20is%20the,10%2D15%20paisa%20per%20kilometer., [Accessed 02-Jan-2023]



An Undergraduate Internship on "Designa and Development of an Electric Motor-Bike"

By

Md. Jahid Hasan

Student ID: **1830329**

Autumn, 2022

The student modified the internship final report as per the recommendation made by his or her academic supervisor and/or panel members during final viva, and the department can use this version for achieving.

Signature of the Supervisor

MD. ASIF BIN KHALED
Faculty,
Department of Computer Science & Engineering
School of Engineering, Technology & Sciences
Independent University, Bangladesh