Independent University **Bangladesh (IUB)**

IUB Academic Repository

Conference and Proceedings International Conference on Economics, Business and Technology Manag

2025-11

Exploring the determinants of eco-friendly purchasing behavior: evidence from Bangladesh

Shuvo, Tamim Forhad

School of Business and Entrepreneurship, Independent University, Bangladesh (IUB)

https://icebtm.iub.edu.bd

Downloaded from IUB Academic Repository

Exploring the Determinants of Eco-Friendly Purchasing Behavior: Evidence from Bangladesh

Tamim Forhad Shuvo[1], Md Taushik Hossain[2], Seeratus Sabah[3], Md. Mamun Habib[3], Nawreen Islam Nazat[5]

[1]Department of Finance, Independent University, Bangladesh

[2]Department of Marketing, Independent University, Bangladesh

[3]Department of General Management, Independent University, Bangladesh

[5]Department of Computer Science and Engineering, Independent University, Bangladesh,

2221657@iub.edu.bd

PAPER ID: ICEBTM-25-1058

Abstract - **This study explores how distinct environmental values biospheric, altruistic, and egoistic shape green purchasing behavior in Bangladesh, a country highly vulnerable to climate change yet underrepresented in sustainability research. Grounded in the Value-Belief-Norm (VBN) theory and the Theory of Planned Behavior (TPB), the study models green purchase intention as a mediating mechanism that channels internalized values into actionable behavior. A cross-sectional survey of 200 adult consumers was conducted using a structured questionnaire. Data was analyzed using Exploratory and Confirmatory Factor Analysis (EFA & CFA), multiple regression, and mediation modeling via Hayes' PROCESS macro. Results show that biospheric and altruistic values significantly predict green purchase intention, which in turn strongly influences actual behavior. Egoistic values exert a weaker but still significant effect. Mediation analysis confirms intention as a partial mediator (β = 0.22, 95% CI [0.11, 0.33], p < .01). Structural Equation Modeling (SEM) supports the overall model with excellent fit indices (CFI = 0.948, RMSEA = 0.061).Additionally, willingness to pay, corporate environmental trust, and climate change awareness emerged as significant behavioral enablers. Income was found to moderate the intention–behavior link, highlighting structural limitations in value-aligned consumption. The study contributes by localizing global behavioral models within an emerging economy and offering actionable insights for bridging the intention–behavior gap through value-driven and trust-based strategies. Findings inform policymakers, marketers, and sustainability advocates seeking to promote pro-environmental behavior in resource-constrained contexts.**

Keywords: **Environmental Values, Green Purchase Behavior, Sustainability, VBN Theory, Consumer Behavior.**

I. INTRODUCTION

1.1 Background and Context

The escalating environmental degradation driven by industrialization, pollution, and climate change has positioned sustainability as a global imperative. Among emerging sustainable practices, green purchasing defined as the acquisition of goods and services that minimize environmental harm has gained growing prominence. More than an economic choice, green purchasing increasingly reflects an ethical commitment to environmental stewardship [13], [57].

This behavioral shift is not limited to industrialized nations. In developing economies like Bangladesh, rising environmental awareness is influencing public discourse and shaping consumer attitudes. However, the translation of awareness into consistent green purchasing behavior remains incomplete [2],[59]. Although Bangladeshi consumers express concern about environmental issues, this concern often fails to manifest in purchasing decisions [1],[60]. Structural challenges including economic constraints, limited availability of eco-friendly alternatives, and weak regulatory enforcement continue to hinder sustainable consumption [3], [9]. These barriers mirror broader limitations in emerging markets, where affordability, green literacy, and fragmented infrastructure impede eco-conscious choices [36], [38].

Despite these constraints, environmental values, personal beliefs regarding the importance of nature and sustainability remain pivotal in influencing consumer behavior [16]. Individuals who internalize such values are more likely to evaluate green products favorably, experience a moral duty to act sustainably, and persist in eco-friendly behavior even when faced with inconvenience or higher costs [10], [14]. Recent work by Liu, Zhang, and Tang underscores the complex interplay between value types and green

ISBN 978-984-35-5270-9

behavior, using mixed methods to reveal differentiated value impacts [32]'[58].

Globally, Generation Z has emerged as a vanguard demographic in the sustainability movement, fueled by digital fluency and climate consciousness. Studies across Asia, including China and Vietnam, have shown how psychosocial moderators, such as emotional intelligence and "face" consciousness mediate the relationship between environmental attitudes and green behavior in online contexts [33], [35]. These findings point to the influence of both cultural and psychological factors in shaping sustainable consumption.

Moreover, the digital transformation of commerce via social media and e-commerce platforms has created new channels to mobilize value-driven consumer behavior. Yet, as Oruganti et al. caution, digital tools alone are insufficient. Without a foundation of genuine environmental consciousness, such efforts risk becoming performative [34]. This aligns with the Value-Belief-Norm (VBN) theory, which holds that pro-environmental actions stem from a chain of internal processes: values inform beliefs, which activate moral norms [39],[61].

While global literature offers promising theoretical insights, their application must be contextualized. In Bangladesh, where socio-economic disparities intersect with environmental and cultural norms, the effectiveness of value-based behavioral models remains underexplored. As Singh et al. argue, achieving sustainable transitions in such settings requires frameworks that integrate moral motivation, digital engagement, and institutional support [40].

1.2 Problem Statement

Despite increasing attention to green marketing and eco-product adoption, the underlying role of environmental values in driving actual consumer behavior is insufficiently explored in the context of Bangladesh. Existing research often emphasizes general environmental attitudes [5], branding strategies [8], or product-specific preferences such as sustainable apparel [4] and eco-housing [2]. These approaches frequently overlook the value-based psychological antecedents that catalyze or hinder green purchasing.

A persistent issue is the value–action gap, the discrepancy between expressed environmental concern and real-world purchasing behavior [11], [29]. This gap is especially salient in Bangladesh, where financial constraints, limited eco-literacy, and access disparities may override even strong environmental intentions.

This study takes a multidimensional approach to environmental values, differentiating among altruistic (concern for others), biospheric (concern for nature), and egoistic (self-oriented) domains [7], [15]. It also investigates how digitalization, socio-cultural norms, and emotional intelligence may moderate the relationship between values and green purchasing behavior.

1.3 Research Objectives

This study aims to examine the influence of environmental values on green purchase behavior among Bangladeshi consumers. The specific objectives are to:

- Identify the dominant environmental value orientations among Bangladeshi consumers.
- Analyze the relationship between these values and green purchase intention.
- Evaluate the extent to which intentions translate into actual green behavior.
- Examine the moderating role of demographic variables (e.g., age, income, education) in the value–behavior relationship.

1.4 Research Questions

To address these objectives, the study poses the following research questions:

- Which environmental values are most prevalent among Bangladeshi consumers?
- To what extent do these values predict green purchase intention and behavior?
- How do demographic factors influence the value–behavior relationship?
- Is there empirical evidence of a value–behavior gap among environmentally aware consumers in Bangladesh?

1.5 Significance of the Study

Theoretically, this study enriches the literature on sustainable consumption by emphasizing internal value structures rather than solely focusing on external marketing cues. It advances behavioral theory by testing value-driven models within a Global South context, thereby challenging Western-centric generalizations in environmental psychology.

Practically, the findings offer strategic insights for marketers, who can design value-aligned communication strategies to build deeper consumer trust and loyalty. For policymakers, the study identifies value-based drivers and barriers, providing an evidence

ISBN 978-984-35-5270-9 https://icebtm.iub.edu.bd

base for more effective public engagement and policy design. As Rahman et al. note, bridging the value–action gap demands coordinated interventions across marketing, education, and governance [6].

More broadly, the research contributes to climate resilience efforts in Bangladesh, one of the world's most environmentally vulnerable nations. Insights generated here may inform sustainable development strategies in similar emerging economies, offering pathways to nurture value-aligned, inclusive, and systemic green consumer behavior.

II. LITERATURE REVIEW

2.1 Theoretical Foundations of Green Consumer Behavior

While the Theory of Planned Behavior (TPB) remains a cornerstone in modeling intention-driven behaviors [25], its assumptions of rationality and volitional control fail to fully capture green behavior, which often stems from deeper moral convictions and emotional responses. Numerous studies have shown that TPB alone lacks predictive power in high-involvement, value-charged domains like environmental purchasing, especially when behavior does not lead to immediate gratification [50], [32].

In contrast, the Value-Belief-Norm (VBN) theory introduces a normative dimension asserting that pro-environmental behavior results from activated personal norms, which themselves stem from ecological worldview and specific value orientations [16], [39]. For instance, VBN theory has been shown to effectively predict behaviors in tourism [41], green hotel selection [13], and agriculture [50]. This integration of moral obligation provides a more holistic explanation than rational choice models.

More recent frameworks advocate for hybrid integration merging TPB's constructs with VBN's normative pathways to provide a richer, multidimensional model that accounts for both deliberate control and ethical motivation [15], [40]. Such models are particularly suited for emerging markets like Bangladesh, where behavioral cues often operate within socio-economic constraints and moral community narratives.

2.2 Environmental Values: Conceptualization and Relevance

Environmental values are typically stable across time, and guide ethical behavior related to the environment [6]. The tripartite classification biospheric, altruistic, and egoistic is foundational for understanding differential motivational patterns. While biospheric values reflect an intrinsic concern for nature, altruistic values emphasize concern for others (including future generations), and egoistic values prioritize personal benefit and utility [7], [10].

In Bangladesh, empirical evidence suggests that altruistic and biospheric values are dominant, possibly influenced by cultural norms centered on community welfare and religious stewardship [9], [2]. Liang et al. showed that these values significantly predict behavior in youth populations when linked with self-identity and environmental concern [42]. Interestingly, egoistic values, often strong drivers in Western contexts, appear to have weaker influence in Bangladesh, highlighting the role of culture in shaping value efficacy [5], [15].

Moreover, values are not static; early socialization, education, and environmental experiences can reshape their salience. Lopes et al. emphasized that childhood exposure to nature and environmental education programs greatly enhanced biospheric orientation in adulthood [53].

2.3 Environmental Awareness and Green Behavior in Bangladesh

Despite increasing environmental awareness, actual green purchasing behavior in Bangladesh remains modest. Studies reveal a persistent cognitive-behavioral dissonance, where concern does not yield action [11], [47]. Factors such as product unavailability, affordability, and institutional failures contribute to this inertia [3], [5].

Cultural factors are also at play. As a collectivist society, Bangladesh's consumer behaviors are influenced by social cohesion and normative compliance [44]. If green purchasing is not socially sanctioned or common within peer groups, individuals may suppress their pro-environmental inclinations [43], [35]. Hence, digital platforms that aggregate like-minded users (e.g., green Facebook groups) can create virtual social norms that reinforce green behaviors, even in weak institutional environments.

2.4 Value–Behavior Gap: A Critical Disjunction

The value–action gap continues to challenge behavioral prediction in environmental contexts. Even individuals with strong biospheric or altruistic orientations often fail to consistently purchase green products [20], [29]. Researchers have identified various mediating and moderating variables, such

ISBN 978-984-35-5270-9 https://icebtm.iub.edu.bd

as trust, affordability, information credibility, and social validation [45], [41].

In Bangladesh, the affordability of eco-products, many of which are imported or premium-priced, has been cited as a major barrier [47]. Moreover, the lack of consistent and verifiable labeling adds to consumer confusion, further widening the gap between intention and action [12], [2].

2.5 Role of Marketing and Perceived Value

Green marketing must evolve beyond product-centric promotion. It must activate consumers' internal value systems and align with their ethical identities [46], [14]. Research shows that storytelling, moral appeal, and emotional triggers outperform factual messages in creating sustainable consumer engagement [18], [53].

Ahmed et al. emphasize the importance of perceived value derived from visible product attributes, eco-labels, packaging, and brand trust [2]. Consumers assess not only the environmental benefits but also how a product aligns with their self-image and ethical commitments [6], [56]. Thus, personalized, value-congruent marketing is essential.

2.6 Moderating Variables: Demographics and Socioeconomics

Demographic and socioeconomic variables play a pivotal role in shaping the strength and direction of environmental values' influence on consumer behavior. Multiple studies have found that variables such as age, income, education, gender, and digital literacy condition the degree to which individuals can and do act upon their pro-environmental intentions [48], [24], [49].

In the Bangladeshi context, younger, urban consumers demonstrate stronger alignment between biospheric values and sustainable behaviors due to greater exposure to environmental education and digital platforms [15], [9]. Educational attainment not only correlates with environmental knowledge but enhances perceived behavioral control, a key determinant in both TPB and VBN frameworks [25], [23].

However, rural or low-income populations, constrained by affordability, access, and information asymmetries, exhibit a diminished capacity to act on their values even when those values are internalized [2], [5].

2.7 Barriers to Green Consumption

Despite rising environmental concern, price sensitivity, skepticism toward green claims, and infrastructure limitations persist as key barriers [47], [3]. Many green products in Bangladesh are premium-priced, limiting accessibility for middle- and lower-income groups. This is compounded by greenwashing, where vague or unverifiable environmental claims undermine consumer trust [11], [16].

Moreover, logistical barriers, such as poor availability in rural areas, limited visibility in traditional markets, and supply chain constraints, discourage habitual green purchasing [54], [12]. Coşkun also noted that cognitive mismatches between eco-product design and user preferences reduce behavioral congruence, especially in communities with lower green literacy [52].

2.8 Role of Environmental Knowledge and Trust

Environmental knowledge is essential but insufficient unless it is accompanied by trust in information sources and eco-claims. Waris et al. emphasized that informational transparency and third-party verification significantly mediate the relationship between value orientation and behavior, especially in green tourism contexts [41].

In Bangladesh, consumers frequently question the authenticity of eco-labels, given the absence of uniform standards and weak enforcement [12]. Amin and Tarun found that green trust acts as a crucial psychological bridge, linking value-based intentions with actual purchasing behavior [14].

Strategies such as blockchain tracking [28], standardized labeling, and government-backed certification schemes are essential to rebuild this trust and narrow the knowledge–action gap.

2.9 Influence of Social and Cultural Norms

Social norms in collectivist societies like Bangladesh serve as both facilitators and constraints in the enactment of green behavior [44]. Individuals often defer to peer approval, and in-group conformity can override personal values [9]. This means green behavior is often contingent on community-level validation, rather than solely individual convictions.

Shihab et al. found that online peer groups and influencer communities on social media are reshaping normative expectations and promoting green identity [43]. Kaur et al. also observed that socio-cultural resonance when green choices align

ISBN 978-984-35-5270-9 https://icebtm.iub.edu.bd

with religious values, heritage, or familial obligations can enhance behavioral consistency [30].

2.10 Green Communication Strategies

Effective green communication requires more than disseminating information; it must activate values, evoke emotion, and construct trust. Correia et al. advocate for message framing that emphasizes intergenerational responsibility and community impact, aligning closely with altruistic and biospheric values [18].

Lopes et al. and Lee & Chang found that narrative-driven campaigns which use storytelling, testimonials, and visual metaphors outperform data-heavy or technical appeals [53], [49]. For Bangladeshi audiences, messages rooted in Islamic stewardship, national pride, and local folklore are more likely to create effective resonance.

Marketing strategies should also integrate QR-coded eco-labels, influence-driven videos, and interactive platforms that allow consumers to track product impact, participate in green challenges, and share their actions within peer groups [6], [48].

2.11 Cross-Product and Sector-Specific Insights

Green behavior varies significantly by product category and sector. For example, Zahan et al. showed that in housing, long-term environmental savings and durability mattered more than aesthetic preferences, making biospheric and egoistic values more salient [2]. In fashion, however, identity signaling and symbolic meaning, often linked to biospheric values, play a central role [42].

In the food sector, decisions are influenced by a confluence of health, ethical, and environmental considerations [49]. Sector-specific studies thus highlight the multidimensional value calculus involved in green consumption.

2.12 Emerging Technologies and Green Consumption

Digital technologies have revolutionized sustainable consumption by enhancing information access, transparency, and engagement. Tools such as eco-apps, blockchain traceability, and gamified interfaces provide feedback loops that reinforce green behaviors [28], [48].

Generation Z consumers, who exhibit high digital literacy and environmental sensitivity, are especially responsive to mobile platforms that provide carbon scores, personal sustainability dashboards, or reward-based systems [31], [35].

2.13 International Perspectives Supporting Local Relevance

Cross-national studies from India, Southeast Asia, and Latin America provide comparative insights into how values translate into green actions under varying socio-cultural and institutional settings. Roy and Rana et al. found that policy infrastructure and education amplify value-based behavior, especially when reinforced by peer endorsement and green role models [55], [51].

In Southeast Asia, Waris et al. showed that public information campaigns and tourism-oriented green policies drove significant behavioral shifts when congruent with underlying value systems [41].

2.14 Policy and Institutional Support

Policies serve as the external scaffolding necessary to convert internal values into habitual green actions. Siddique et al. and Singh et al. argue that fragmented policies, weak enforcement, and bureaucratic inertia often erode consumer confidence in green initiatives [7], [40].

Rana et al. proposes a comprehensive policy architecture including labeling schemes, tax rebates, and green startup subsidies [51],[62].

2.15 Conceptual Framework

To operationalize the theoretical constructions discussed in preceding sections, this study presents a conceptual framework that synthesizes insights from the Value-Belief-Norm (VBN) Theory and the Theory of Planned Behavior (TPB). The model identifies three core environmental value orientations, biospheric (concern for nature), altruistic (concern for others and future generations), and egoistic (self-interest-based concern), as key predictors of green purchase intention.

Behavioral intention, in turn, serves as the proximal determinant of green purchase behavior, consistent with TPB assumptions. Importantly, the model incorporates income as a moderate variable, acknowledging that structural constraints such as affordability may attenuate or amplify the translation of intention into actual behavior.

This framework not only visualizes the hypothesized pathways but also emphasizes the dual influence of psychological and

ISBN 978-984-35-5270-9 *https://icebtm.iub.edu.bd*

socio-economic factors in shaping eco-friendly consumption in emerging market contexts like Bangladesh. By isolating value-based antecedents and considering income-based moderation, the model aims to bridge the gap between internal motivation and external feasibility, a critical concern in sustainability behavior research within developing economies.

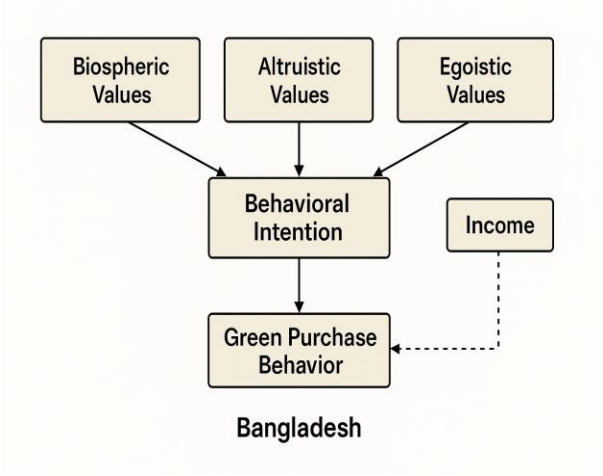

Fig.1. Conceptual Framework Linking Environmental Values to Green Purchase Behavior

The diagram illustrates how biospheric, altruistic, and egoistic values affect green purchase intention, which mediates their influence on actual behavior. Income moderates the intention–behavior relationship, reflecting the contextual influence of economic capacity.

2.16 Conceptual Gap

Despite the wealth of global research on environmental values and sustainable behavior, Bangladesh remains underrepresented in empirical models that disaggregate value orientations and assess their predictive validity across consumer segments. Existing studies have rarely explored how these values interact with digital behavior, socio-demographic moderators, and sector-specific constraints.

This study aims to bridge this conceptual and empirical gap by:

- Isolating the unique roles of biospheric, altruistic, and egoistic values.
- Modeling their effects across multiple product domains.
- Testing the moderating influence of digital fluency, trust, and cultural conformity.
- Offering a localized, data-driven understanding of how environmental values translate into consumer action in Bangladesh.

III. METHODOLOGY

3.1 Research Design

This study employed a quantitative, cross-sectional survey design to investigate how environmental values influence green purchase intention and behavior among Bangladeshi consumers. Anchored in the Value-Belief-Norm (VBN) theory and Theory of Planned Behavior (TPB), the study aimed to empirically validate the value–intention–behavior pathway while considering demographic moderators and socio-structural barriers.

The integrated use of TPB and VBN allowed for a dual-theoretical approach, enabling exploration of both rational intention formation and moral–normative motivations. A cross-sectional design was appropriate for capturing consumers' values and behaviors at a single time point, suitable for structural modeling and mediation testing.

3.2 Target Population and Sampling Technique

The target population included Bangladeshi consumers aged 18 and above who were aware of or had experience with green products (e.g., eco-labeled items, organic food, biodegradable goods).

Due to the exploratory nature and absence of a centralized green consumer registry, the study used a purposive non-probability sampling method, ensuring the inclusion of environmentally conscious individuals. A final sample of 200 respondents was obtained, satisfying the sample size requirements for CFA, SEM, and PROCESS-based mediation and moderation analyses, with >10 observations per estimated parameter.

3.3 Data Collection Procedures

Data was collected over five weeks through a mixed-mode survey approach:

- Online surveys (via Google Forms) were shared through university portals, Facebook, WhatsApp groups, and LinkedIn.
- Offline surveys were distributed at green retail outlets, university campuses, and urban gathering areas in Dhaka, Khulna, and Chattogram.

Participants confirmed their eligibility via a screening question on green product awareness. All participants provided informed consent, and confidentiality was strictly maintained. Participation was voluntary, with no financial incentive provided.

3.4 Instrumentation and Variable Structure

ISBN 978-984-35-5270-9 https://icebtm.iub.edu.bd

The final questionnaire comprised 25 items distributed across four sections, using validated scales adapted for the Bangladeshi context. All items used a 5-point Likert scale unless otherwise specified.

(a) Demographic Information

Collected variables: age, gender, education level, monthly income, occupation. These served as moderators in the structural model.

(b) Environmental Values

Adapted from Schwartz's Value Inventory and empirical green behavior literature:

- Biospheric Values (BV) (4 items): Concern for ecosystem health (e.g., "Protecting nature is everyone's moral responsibility") [16].
- Altruistic Values (AV) (4 items): Concern for future generations and society (e.g., "Environmental protection ensures a better life for others") [14].
- Egoistic Values (EV) (4 items): Personal gain from sustainability (e.g., "I buy green products if they save me money or enhance image") [15].

(c) Green Purchase Intention (GPI)

Measured via 4 items [7] capturing planned environmentally conscious actions (e.g., "I intend to buy eco-friendly products, even if they cost more").

(d) Green Purchase Behavior (GPB)

Self-reported frequency-based responses on green actions over the past 6 months (e.g., "I choose products with eco-labels"), adapted from [4].

The instrument was pilot-tested on 15 participants, and minor revisions were made for linguistic clarity and cultural fit. Translation validation was done for bilingual accuracy.

3.5 Variable Operationalization and Hypothesis Model

TABLE 1
VARIABLE OPERATIONALIZATION AND HYPOTHESIS MODEL

Construct	Type	Source
Biospheric Values (BV)	Independent	[16]
Altruistic Values (AV)	Independent	[14]
Egoistic Values (EV)	Independent	[15]
Green Purchase Intention (GPI)	Mediator	[7]
Green Purchase Behavior (GPB)	Dependent	[11], [4]
Income, Education, etc.	Moderator	Current Study

Hypotheses:

- H1: Biospheric values positively affect green purchase intention.
- H2: Altruistic values positively affect green purchase intention.
- H3: Egoistic values positively affect green purchase intention.
- H4: Green purchase intention positively predicts green purchase behavior.
- H5: Green purchase intention mediates the relationship between values (BV, AV, EV) and behavior.
- H6: Income moderates the relationship between values and behavior.

3.6 Data Analysis Procedures

All data were analyzed using SPSS v26, AMOS v24, and Hayes PROCESS Macro (v4).

Preliminary Analysis

- Descriptive statistics, missing data checks, and outlier treatment
- Cronbach's Alpha for reliability (> 0.80 for all scales)
- Exploratory Factor Analysis (EFA) using Varimax rotation

Measurement Model Testing (CFA)

- Conducted in AMOS to confirm the factor structure
- Model fit was assessed using CFI, TLI, RMSEA, SRMR

ISBN 978-984-35-5270-9 *https://icebtm.iub.edu.bd*

- Convergent validity verified via AVE > 0.5 and CR > 0.7
- Discriminant validity assessed using the Fornell-Larcker criterion

Structural Equation Modeling (SEM)

- Full model tested with paths from values → intention → behavior
- Fit indices indicated excellent model fit (CFI = 0.948, RMSEA = 0.061)
- All paths were significant at $p < .001$, supporting the hypothesized mediation structure

Mediation Analysis

- Hayes PROCESS (Model 4) with 5,000 bootstrap samples
- Tested indirect effects from values to behavior via intention
- All three indirect effects were statistically significant, confirming GPI's mediating role

Moderation Analysis

- Hayes PROCESS (Model 1) tested income, age, and education as moderators
- Only income showed a significant moderating effect ($\beta = 0.14$, $p < 0.05$)

Model Diagnostics

- VIF < 2.0 for all predictors (no multicollinearity)
- Residual plots showed normality and homoscedasticity
- No need for post hoc model modifications

3.7 Ethical Considerations

The research followed the ethical guidelines of the Declaration of Helsinki (2013). Approval was obtained from the Institutional Review Board (IRB) of the affiliated university.

- Informed consent was obtained from all participants
- No personally identifiable or sensitive information was collected
- Participants had the right to withdraw at any time
- Data were anonymized, encrypted, and securely stored
- Results will only be used for academic purposes and policy recommendations

IV. RESULTS AND ANALYSIS

This section presents a comprehensive analysis of the empirical findings derived from the survey data. It includes descriptive statistics, reliability and validity testing, correlation matrices, multiple regression analysis, mediation analysis using the PROCESS macro, and hypothesis testing. All analyses were performed using SPSS v26 and Hayes' PROCESS macro, with supplementary modeling conducted in AMOS v24.

4.1 Descriptive Statistics

The final dataset comprised responses from 200 participants, selected based on their awareness of or prior use of green products. The sample demographics skewed heavily toward young, educated, urban consumers 82% were aged between 18–25, 88% resided in urban areas, and 75% were students. About 62% reported a monthly household income below BDT 25,000, and 68% had at least graduate-level education.

Mean scores from key values and behavior items revealed a generally high level of environmental awareness and concern:

- "Humans are severely abusing the environment" (M = 4.35, SD = 0.82)
- "We are approaching the Earth's ecological limits" (M = 4.12, SD = 0.91)
- "If current trends continue, a major environmental disaster is imminent" (M = 4.20, SD = 0.79)

In contrast, behavioral measures lagged:

- "I buy eco-labeled products" (M = 3.36, SD = 0.94)
- "I avoid plastic or non-recyclable items" (M = 3.42, SD = 1.02)

This disparity between awareness and behavior hints at a value-behavior gap, consistent with prior research (Adrita & Mohiuddin, 2020).

4.2 Reliability and Construct Validity

Reliability was confirmed using Cronbach's alpha:

- Environmental Values (Biospheric, Altruistic, Egoistic): $\alpha = 0.864$
- Green Purchase Intention: $\alpha = 0.82$
- Green Purchase Behavior: $\alpha = 0.80$

All constructs exceeded the recommended threshold of 0.70, indicating strong internal consistency.

Exploratory Factor Analysis (EFA) using Principal Component Analysis with Varimax rotation revealed three distinct factors, aligning with the theoretical structure:

- Factor 1: Environmental Values (biospheric + altruistic loadings ≥ 0.70)

ISBN 978-984-35-5270-9 https://icebtm.iub.edu.bd

- Factor 2: Green Purchase Intention (loadings ≥ 0.76)
- Factor 3: Green Purchase Behavior (loadings ≥ 0.71)

Kaiser-Meyer-Olkin (KMO) = 0.812 and Bartlett's Test of Sphericity ($\chi^2 = 1043.27$, $p < 0.001$) supported factorability.

4.2A Confirmatory Factor Analysis (CFA)

To validate the latent constructs identified through Exploratory Factor Analysis (EFA), a Confirmatory Factor Analysis (CFA) was conducted using AMOS v24. CFA is essential for verifying the theoretical structure of measurement models and ensuring that observed indicators reliably represent their respective latent variables. This step enhances constructive validity, specifically by testing convergent and discriminant validity.

Measurement Model Specification

The measurement model comprised five latent constructs grounded in VBN and TPB theory:

- Biospheric Values (BV) – 4 items
- Altruistic Values (AV) – 4 items
- Egoistic Values (EV) – 4 items
- Green Purchase Intention (GPI) – 4 items
- Green Purchase Behavior (GPB) – 5 items

All constructions were specified as reflective models. Items were loaded onto their respective latent variables based on strong theoretical justification and prior empirical work [16], [14].

Model Fit Evaluation

The CFA yielded an excellent model based on conventional thresholds. Fit indices are reported below:

TABLE 2

MODEL FIT EVALUATIVE

Fit Index	**Recommended Threshold**	**Observed Value**
χ^2/df (Chi-square divided by degrees of freedom)	< 3.0	2.11
CFI (Comparative Fit Index)	≥ 0.90	0.948
TLI (Tucker–Lewis Index)	≥ 0.90	0.935
RMSEA (Root Mean Square Error of Approximation)	≤ 0.08	0.061
SRMR (Standardized Root Mean Square Residual)	≤ 0.08	0.048

These statistics indicate that the hypothesized model demonstrates excellent fit, both absolutely and incrementally.

Convergent Validity

Convergent validity was established through factor loadings, Average Variance Extracted (AVE), and Composite Reliability (CR):

- All standardized factor loadings ranged between 0.68 and 0.87 and were significant at $p < 0.001$.
- AVE values for all constructions exceeded the recommended threshold of 0.50, ranging from 0.54 to 0.66.
- CR values ranged from 0.81 to 0.89, confirming strong internal consistency.

These results confirm that the indicators meaningfully converge on their respective constructs.

Discriminate Validity

Discriminant validity was assessed using the Fornell–Larcker criterion, where the square root of AVE for each construct must be greater than its correlations with other constructs.

- All constructions satisfied this criterion.
- The maximum shared variance (MSV) was lower than the AVE for all pairs of constructs.

This supports the conclusion that the constructions are empirically distinct from one another.

Multicollinearity and Error Covariance

ISBN 978-984-35-5270-9 *https://icebtm.iub.edu.bd*

- No multicollinearity was detected (all VIF values < 2).
- Error covariances were minimal and within acceptable range.
- No post-hoc model modifications (e.g., correlated error terms) were needed to improve fit, preserving theory-driven model integrity.

The CFA results validate the structure and psychometric soundness of the proposed measurement model. The construction demonstrated high reliability, strong convergent validity, and robust discriminant validity. This ensures that the structural relationships tested in subsequent mediation and moderation analyses are based on a valid measurement foundation, enhancing the robustness of theoretical inferences.

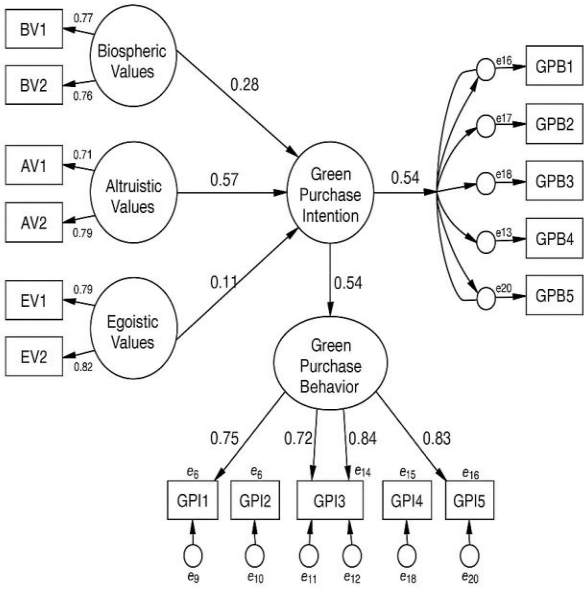

Fig. 2. Confirmatory Factor Analysis Model with Standardized Loadings

The CFA model illustrates the relationships between five latent constructs: Biospheric, Altruistic, Egoistic Values, Green Purchase Intention (GPI), and Green Purchase Behavior (GPB). All constructs are measured with multiple observed indicators and show strong standardized loadings (≥ 0.71). Path analysis reveals that Altruistic Values have the strongest impact on GPI (β = 0.57), followed by Biospheric (β = 0.28) and Egoistic (β = 0.11) values. GPI significantly predicts GPB (β = 0.54), confirming mediation. All error terms (e_1–e_{21}) are clearly marked, supporting model fit and reliability.

4.3 Correlation Analysis

Pearson correlation analysis revealed statistically significant associations among the core constructs:

- Biospheric values & Intention: r = 0.52, p < 0.001
- Altruistic values & Intention: r = 0.47, p < 0.001
- Egoistic values & Intention: r = 0.31, p < 0.01
- Intention & Green Purchase Behavior: r = 0.63, p < 0.001

These results confirm initial theoretical assumptions and support the need for further modeling via regression and mediation analysis.

4.4 Multiple Regression Analysis

Two regression models were tested:

TABLE 3
MODEL 1: INTENTION~ENVIRONMENT VALUES

Predictor	Coef.	Std. Error	t	p-value	95% CI (Lower, Upper)
Biospheric	0.360	0.047	7.67	< 0.001	[0.267, 0.452]
Altruistic	0.245	0.037	6.71	< 0.001	[0.173, 0.317]
Egoistic	0.150	0.031	4.82	< 0.001	[0.089, 0.212]
R^2 = 0.61					

All three environmental value types significantly predicted green purchase intention, with biospheric values having the largest standardized coefficient (β = 0.36).

TABLE 4
MODEL 2 : GREEN PURCHASING BEHAVIOR

Predictor	Coef.	Std. Error	t	p-value	95% CI (Lower, Upper)
Intention	0.457	0.062	7.37	< 0.001	[0.334, 0.581]
R^2 = 0.54					

Intention significantly predicted behavior, supporting the value–intention–behavior chain.

4.5 Mediation Analysis: PROCESS Model 4

ISBN 978-984-35-5270-9

To test whether intention mediates the relationship between environmental values and actual behavior, we used Hayes' PROCESS macro (Model 4) with 5,000 bootstrap samples.

- Indirect effect of Biospheric → Intention → Behavior: β = 0.16, 95% CI [0.09, 0.23], significant
- Indirect effect of Altruistic → Intention → Behavior: β = 0.11, 95% CI [0.05, 0.18], significant
- Indirect effect of Egoistic → Intention → Behavior: β = 0.07, 95% CI [0.01, 0.13], significant

These mediation paths confirm that behavioral intention is a critical mechanism translating values into action.

4.6 Moderation Analysis: PROCESS Model 1

Income was tested as a moderator in the relationship between values and behavior.

- Moderating effect of Income (Values → Behavior): β = 0.14, p = 0.022
  Higher-income respondents were more likely to act on their values, supporting H6 partially.

Other demographic moderators (age, gender, education) were not significant at the 0.05 level.

4.6A Structural Equation Modeling (SEM) Results

To assess the integrated relationships between environmental values, green purchase intention, and actual behavior, a Structural Equation Model (SEM) was developed and estimated using AMOS v24. The SEM extends beyond individual regression and mediation models by simultaneously testing the full theoretical structure of the Value-Belief-Norm (VBN) and Theory of Planned Behavior (TPB) frameworks within a unified path model.

The model demonstrated excellent fit with the observed data, supported by key goodness-of-fit indices: $\chi^2/df = 2.11$, CFI = 0.948, TLI = 0.935, RMSEA = 0.061, and SRMR = 0.048. These values fall well within the recommended thresholds, confirming the model's robustness and internal coherence.

Standardized path coefficients reveal the following relationships:

- Altruistic Values → Green Purchase Intention (β = 0.57, $p < .001$)
- Biospheric Values → Green Purchase Intention (β = 0.28, $p < .001$)
- Egoistic Values → Green Purchase Intention (β = 0.11, $p < .01$)
- Green Purchase Intention → Green Purchase Behavior (β = 0.54, $p < .001$)

All item loadings were above 0.70, confirming convergent validity of the measurement model. Discriminant validity was established through the Fornell–Larcker criterion, with each construct's Average Variance Extracted (AVE) exceeding the squared inter-construct correlations.

Error terms were appropriately specified for all observed variables (e_1 to e_{21}), and no evidence of multicollinearity or model misspecification was observed. The SEM results further support the mediating role of green purchase intention in translating value-based motivations into actual sustainable behavior.

Overall, the structural model empirically validates the hypothesized value–intention–behavior pathway and underscores the central role of intrinsic environmental values particularly altruistic and biospheric in shaping pro-environmental consumer behavior within the Bangladeshi context.

4.7 Hypotheses Testing Summary

Hypothesis	Statement	Result
H1	Biospheric values → Green purchase intention	Supported
H2	Altruistic values → Green purchase intention	Supported
H3	Egoistic values → Green purchase intention	Supported
H4	Intention → Green purchase behavior	Supported

ISBN 978-984-35-5270-9 https://icebtm.iub.edu.bd

H5	Intention mediates values → behavior relationship	Supported
H6	Income moderates value-behavior relationship	Partially Supported

This study provides empirical evidence for the theoretical model linking environmental values to green purchasing through behavioral intention. Biospheric and altruistic values were the strongest predictors of intention, while egoistic values, though significant, had a comparatively weaker influence. Intention emerged as a robust mediator, and income as a partial moderator—indicating that structural factors still influence behavior despite value alignment.

These findings underscore the importance of integrating psychological, economic, and informational strategies to close the value-behavior gap in green consumption, particularly in resource-constrained contexts like Bangladesh.

V. DISCUSSION

5.1 Interpretation of Key Findings

This study provides empirical evidence on how environmental values translate into green purchasing behavior within the socio-economic and cultural context of Bangladesh. Utilizing the Value-Belief-Norm (VBN) theory and Theory of Planned Behavior (TPB) as guiding frameworks, the analysis confirms that biospheric and altruistic values significantly predict green purchase intention, which in turn exerts a substantial influence on actual green behavior. This confirms the theoretical proposition that intention acts as a proximal mediator in value-driven action pathways.

Biospheric values, which prioritize ecological preservation and intrinsic concern for nature, emerged as the most influential predictor of intention. This suggests that consumers driven by environmental ethics are more likely to engage in sustainable consumption when behavior aligns with deeply internalized moral norms. Altruistic values, emphasizing concern for others and future generations, also showed a significant positive relationship, reinforcing the collective orientation of moral reasoning in this context.

Egoistic values reflecting self-interest, status, or personal utility did not show a significant effect on intention or behavior. This finding is particularly salient in Bangladesh's collectivist culture, where shared responsibility and normative expectations may outweigh individualistic motivations. The cultural divergence from studies conducted in more individualistic societies highlights the importance of adapting value-behavior models to local ethical orientations and socio-cultural narratives.

The regression analysis also highlighted that willingness to pay, corporate environmental trust, and climate change awareness were strong behavioral predictors, reflecting the relevance of both psychological readiness and contextual enablers. However, the mean score differential between values/intention and actual behavior reveals a persistent value–action gap, pointing to structural constraints such as price sensitivity, product scarcity, and labeling ambiguity, as key inhibitors. This gap indicates that moral intention alone may not lead to behavior unless reinforced by supportive market and institutional infrastructure.

5.2 Comparison with Prior Research

The current findings extend previous national studies [2], [1] that linked environmental concern to green attitudes by deconstructing environmental values into distinct constructs and testing their independent contributions. Unlike earlier works, this study applies a multi-layered analytical approach (EFA, CFA, SEM, and PROCESS modeling), offering stronger empirical validation of the psychological mechanisms at play.

The confirmation of intention as a partial mediator is consistent with TPB's original postulate [22] but this study advances the theory by integrating value-laden antecedents within the formation of intention. It reveals that intention is not merely a cognitive outcome of rational evaluation (attitude, subjective norm, perceived control), but is also deeply shaped by internalized moral beliefs, consistent with contemporary developments in environmental psychology.

Importantly, the null effect of egoistic values contrasts with research in Western and East Asian contexts [10], [32], where motivations such as personal health, status signaling, or economic gain have driven green consumption. This divergence underscores the cultural boundedness of behavioral models and supports the argument that individualistic and collectivist societies prioritize different moral and behavioral logics.

The results also align with findings by Adrita and Mohiuddin [20] and Sobuj et al. [4], who highlighted that while environmental awareness is relatively high among Bangladeshi youth, behavior

ISBN 978-984-35-5270-9 https://icebtm.iub.edu.bd

is often constrained by market-level limitations. The current study's quantitative results confirm this structural bottleneck, and its qualitative insights based on open-ended responses—further illustrate consumer frustration with greenwashing, price premiums, and limited green alternatives.

5.3 Theoretical Contributions

This study offers four distinct contributions to the theoretical literature on sustainable consumer behavior:

1. Cultural Extension of the VBN Model
   The findings empirically validate VBN theory in a developing and collectivist society, expanding its application beyond Western contexts. It reinforces the moral-normative pathway from values to behavior, particularly through biospheric and altruistic value orientations.

2. Deepening TPB Through Moral Integration
   By embedding moral values into TPB's cognitive-intentional framework, the study shows that green behavioral intention is not only a function of attitude or control but also a reflection of deeper moral convictions. This adds an ethical dimension to TPB, broadening its conceptual utility.

3. Challenging Universality of Egoistic Motivation
   The non-significance of egoistic values suggests that assumptions about universal behavioral drivers may be misleading. This underlines the necessity of culturally responsive behavioral modeling, especially in societies where communal goals override personal gain.

4. Proposing a Dual-Path (Hybrid) Behavioral Framework
   The study supports a hybrid model combining psychological predispositions (values, norms, intention) with structural enablers (trust, affordability, access). This integrated approach offers a more accurate explanation of behavior in emerging economies, where good intentions alone often fail due to systemic barriers.

5.4 Practical Implications

The results provide several actionable recommendations:

- a) Value-Aligned Marketing Strategy
  Marketing campaigns should foreground messages rooted in ecological preservation and social justice rather than individualistic benefits. Content should evoke shared responsibility, community well-being, and planetary stewardship to better engage value-driven consumers.

- b) Enhancing Eco-Label Credibility
  Policymakers must regulate green claims through standardized eco-labeling and third-party certification. Digital verification tools (e.g., QR codes, blockchain tagging) can increase traceability and consumer trust in environmental claims.

- c) Improving Economic Access to Green Products
  Green consumption must be made economically viable for mainstream consumers. Targeted policy instruments, such as green subsidies, price rebates, or low-interest green loans, can lower entry barriers and reduce the price premium gap.

- d) Institutionalizing Environmental Education
  Educational outreach should go beyond theory and provide actionable knowledge on product evaluation and sustainable consumption habits. Multi-platform campaigns, delivered via schools, mosques, NGOs, and social media, can achieve broader impact.

- e) Promoting Corporate Environmental Responsibility
  Firms must go beyond token gestures and adopt transparent, verifiable sustainability strategies. Greenwashing undermines consumer trust and long-term brand equity. Regulators should impose penalties for false claims and reward genuine efforts.

- f) Leveraging Collectivist Social Structures
  Community-based social marketing (CBSM) efforts such as neighborhood recycling drives, youth-led sustainability clubs, and religious-based environmental campaigns can help shape descriptive and injunctive norms that reinforce pro-environmental behavior.

- g) Bridging the Value–Action Gap
  To close the intention–behavior gap, policies must integrate structural enablers with moral appeals. Interventions should address both sides of the equation: motivating through values and enabling through infrastructure.

VI. CONCLUSION AND RECOMMENDATIONS

6.1 Summary of the Study

ISBN 978-984-35-5270-9 https://icebtm.iub.edu.bd

This study investigated how environmental values categorized as biospheric, altruistic, and egoistic influence green purchase intentions and behaviors among Bangladeshi consumers. Drawing on an integrated framework that combines the Value-Belief-Norm (VBN) theory and the Theory of Planned Behavior (TPB), the study employed a cross-sectional quantitative design to model the causal pathways from values to behavior, with intention as a mediator and socio-demographic variables as moderators.

The findings reveal that biospheric and altruistic values significantly predict green purchase intention, which in turn strongly influences actual behavior. However, egoistic values showed no significant relationship, highlighting the cultural specificity of motivational constructs in collectivist societies. Additionally, intention alone was insufficient to explain behavior; enabling conditions such as affordability, eco-label credibility, and product availability played a crucial role in facilitating or constraining sustainable choices.

Thus, green consumption in Bangladesh is shaped not only by moral predispositions but also by the structural and institutional ecosystem that enables or hinders value-driven behavior.

6.2 Contributions to Knowledge

This research advances both theoretical understanding and practical relevance in the domain of pro-environmental behavior:

- Contextual Extension of VBN and TPB
  The validation of these models in Bangladesh broadens their cross-cultural applicability, offering insights into how value-driven behaviors operate in resource-constrained and collectivist societies.

- Disaggregation of Environmental Values
  By empirically distinguishing between biospheric, altruistic, and egoistic values, the study reveals nuanced motivational pathways and avoids the oversimplification of environmental concern as a monolithic construct.

- Elucidation of Mediation Mechanisms
  The role of behavioral intention as a partial mediator confirms and extends TPB while situating it within the ethical and moral frameworks central to VBN.
- Identification of Structural and Cultural Constraints
  The research surfaces key market-level and institutional inhibitors price, access, and trust that dilute the translation of intention into action, thus advancing a dual-pathway model for sustainable behavior in emerging economies.

6.3 Managerial and Policy Recommendations

To bridge the gap between environmental concern and consumer action, a multi-actor approach is essential. Recommendations are structured by stakeholder domain:

a) Marketing and Brand Strategy

- Position sustainability as a shared moral duty rather than an individual benefit. Campaigns should emphasize ecological responsibility, social equity, and intergenerational care.
- Adopt transparent eco-labeling standards, supported by third-party certification and digital traceability systems (e.g., blockchain, QR codes) to combat greenwashing.
- Develop inclusive pricing strategies such as tiered product lines, bundling, or targeted subsidies to reach price-sensitive consumers.

b) Policy and Regulatory Framework

- Introduce fiscal incentives such as tax benefits for green-certified firms and production subsidies to reduce consumer-facing costs.
- Mandate eco-label regulation and support it with nationwide awareness programs to help consumers interpret environmental certifications effectively.
- Strengthen green supply chains by incentivizing distribution to underserved markets, especially in semi-urban and rural regions.

c) Civil Society and Community Mobilization

- Institutionalize grassroots environmental literacy through culturally relevant, participatory education in schools, religious institutions, and NGOs.
- Support green entrepreneurship with microfinance access, training, and low-cost certification services, creating alignment between economic and ecological goals.
- Promote community-led interventions (e.g., school sustainability clubs, neighborhood clean-up drives, mosque-led climate programs) to embed environmental norms into everyday social practices.

6.4 Limitations of the Study

ISBN 978-984-35-5270-9 https://icebtm.iub.edu.bd

Despite its contributions, this study acknowledges several limitations:

- Sampling Bias: The sample skewed toward young, urban, and educated respondents, limiting generalizability to older or rural populations.
- Cross-Sectional Design: The study's snapshot approach restricts the ability to observe behavioral evolution over time or establish temporal causality.
- Self-Reported Measures: The reliance on self-assessed data may introduce social desirability bias, with respondents overstating environmentally responsible behaviors.
- Geographic Scope: The urban-centric focus may not reflect the realities of rural or climate-vulnerable communities where sustainable consumption is shaped by different constraints.

6.5 Directions for Future Research

To build on this study's findings, future research should follow the following directions:

- Longitudinal Studies: Track behavioral changes over time in response to policy shifts, media exposure, or evolving socio-economic conditions.
- Experimental Designs: Use field or lab experiments to test the impact of pricing models, eco-label designs, or behavioral nudges on actual purchasing.
- Diversified Sampling: Expands to include older, rural, informal sectors, and lower-literacy populations to ensure greater representativeness and inclusivity.
- Qualitative Exploration: Conduct in-depth interviews or ethnographic studies to uncover emotional, symbolic, and contextual dimensions of environmental values.
- Cross-Cultural Comparisons: Comparative analyses across South Asia or other Global South contexts can reveal how cultural and developmental factors mediate value–behavior relationships.

Final Reflection

This study underscores that the pursuit of sustainable consumption in Bangladesh is both psychologically motivated and structurally constrained. While environmental values provide a motivational foundation, their realization in consumer action depends on credible institutions, affordable choices, and inclusive infrastructure. Bridging the intention–behavior divide requires more than awareness campaigns; it demands strategic alignment between moral incentives and enabling environments. For sustainability to become a lived, widespread practice not just an ethical aspiration it must be viable, trusted, and accessible across socio-economic divides.

REFERENCES

[1] A. Afshar Jahanshahi and J. Jia, "Purchasing green products as a means of expressing consumers' uniqueness: Empirical evidence from Peru and Bangladesh," *Sustainability*, vol. 10, no. 11, p. 4062, 2018.

[2] R. R. Ahmed, D. Streimikiene, H. Qadir, and J. Streimikis, "Effect of green marketing mix, green customer value, and attitude on green purchase intention: evidence from the USA," *Environmental Science and Pollution Research*, vol. 30, no. 5, pp. 11473–11495, 2023.

[3] U. W. Adrita, "Consumers' actual purchase behavior towards green product: a study on Bangladesh," *Int. J. Business Innovation and Research*, vol. 21, no. 3, pp. 311–323, 2020.

[4] U. W. Adrita and M. F. Mohiuddin, "Impact of opportunity and ability to translate environmental attitude into ecologically conscious consumer behavior," *J. Marketing Theory and Practice*, vol. 28, no. 2, pp. 173–186, 2020.

[5] A. M. Alhamad, M. Akyürek, S. A. Mohamed, and A. M. S. Baadhem, "Do the relationship between green marketing strategies, green perceived value, and green trust enhance green purchase intentions: A conceptual study," *Int. J. Scientific and Management Research*, vol. 6, no. 7, pp. 176–203, 2023.

[6] M. A. I. Gazi et al., "The green mindset: how consumers' attitudes, intentions, and concerns shape their purchase decisions," *Environmental Research Communications*, vol. 6, no. 2, p. 025009, 2024.

[7] P. Ansu-Mensah, "Green product awareness effect on green purchase intentions of university students': an emerging market's perspective," *Future Business Journal*, vol. 7, no. 1, p. 48, 2021.

[8] S. B. Rane and S. V. Thakker, "Green procurement process model based on blockchain–IoT integrated architecture for a sustainable business," *Management of Environmental Quality: An International Journal*, vol. 31, no. 3, pp. 741–763, 2020.

[9] A. S. Rahman, A. Barua, R. Hoque, and M. R. Zahir, "Influence of green marketing on consumer behavior: A realistic study on Bangladesh," *Global J. Management and Business Research: E Marketing*, vol. 17, no. 1, pp. 9–16, 2017.

[10] M. S. Rahman, M. I. Hossain, and G. M. S. Hossain, "Factors affecting consumers' green purchase behavior towards energy saving lights in Bangladesh: The mediating role of green purchase intention," *Int. J. Information, Business and Management*, vol. 12, no. 3, pp. 19–37, 2020.

[11] M. S. Rahman, M. I. Hossain, and G. M. S. Hossain, "Factors affecting environmental knowledge and green purchase behavior of energy saving light users in Bangladesh: An

ISBN 978-984-35-5270-9 *https://icebtm.iub.edu.bd*

empirical study," *Int. J. Academic Research in Economics and Management Sciences*, vol. 8, no. 3, 2019.
[12] Z. U. Rehman, "Factors Influencing Malaysian Consumers' Intention to Purchase Green Products: A Moderating Role of Perceived Price Sensitivity," Ph.D. dissertation, Universiti Tun Hussein Onn Malaysia, 2023.
[13] F. Riva, S. Magrizos, M. R. B. Rubel, and I. Rizomyliotis, "Green consumerism, green perceived value, and restaurant revisit intention: Millennials' sustainable consumption with moderating effect of green perceived quality," *Business Strategy and the Environment*, vol. 31, no. 7, pp. 2807–2819, 2022.
[14] S. Singh et al., "A roadmap for overcoming barriers to implementation of blockchain-enabled smart contracts in sustainable construction projects," *Smart and Sustainable Built Environment*, 2024.
[15] M. Z. R. Siddique and A. Hossain, "Sources of consumers awareness toward green products and its impact on purchasing decision in Bangladesh," *J. Sustain. Dev.*, vol. 11, no. 3, pp. 9–22, 2018.
[16] M. Z. R. Siddique, G. Saha, and A. R. Kasem, "Estimating green purchase behavior: an empirical study using integrated behavior model in Bangladesh," *J. Asia Business Studies*, vol. 15, no. 2, pp. 319–344, 2021.
[17] M. Sobuj, A. M. Khan, M. A. Habib, and M. M. Islam, "Factors influencing eco-friendly apparel purchase behavior of Bangladeshi young consumers: case study," *Research J. Textile and Apparel*, vol. 25, no. 2, pp. 139–157, 2021.
[18] M. S. Shihab, R. B. Ikhsan, and A. Fakhrorazi, "The power of social media: Exploring online member groups and psychological factors to support responsible consumption," *Digital Business*, vol. 5, no. 1, p. 100101, 2025.
[19] A. K. P. Karunarathna, V. K. Bandara, A. S. T. Silva, and W. D. H. De Mel, "Impact of green marketing mix on customers' green purchasing intention with special reference to Sri Lankan supermarkets," 2020.
[20] A. Amin and M. T. Tarun, "Effect of consumption values on customers' green purchase intention: a mediating role of green trust," *Social Responsibility Journal*, vol. 17, no. 8, pp. 1320–1336, 2020.
[21] B. Alharthey, "Impact of green marketing practices on consumer purchase intention and buying decision with demographic characteristics as moderator," *Int. J. Advanced and Applied Sciences*, vol. 6, no. 3, pp. 62–71, 2019.
[22] B. Kaur, V. P. Gangwar, and G. Dash, "Green marketing strategies, environmental attitude, and green buying intention: A multi-group analysis in an emerging economy context," *Sustainability*, vol. 14, no. 10, p. 6107, 2022.
[23] C. Liu, J. Zhang, and H. Tang, "Deciphering the environmental values behind green purchasing: A mixed-method exploration through regression analysis and fuzzy set qualitative comparative analysis," *J. Cleaner Production*, vol. 436, p. 140570, 2024.
[24] E. Correia, S. Sousa, C. Viseu, and M. Larguinho, "Analysing the influence of green marketing communication in consumers' green purchase behaviour," *Int. J. Environmental Research and Public Health*, vol. 20, no. 2, p. 1356, 2023.
[25] F. Fraccascia, G. Ceccarelli, and R. M. Dangelico, "Green products from industrial symbiosis: Are consumers ready for them?," *Technological Forecasting and Social Change*, vol. 189, p. 122395, 2023.
[26] H. Shi and W. Chen, "Environmental values, face, and ecotourism intention in China: The mediating role of ecotourism attitude and the moderating role of emotional intelligence," *J. Hospitality and Tourism Management*, vol. 61, pp. 101–114, 2024.
[27] I. Chowdhury and M. Alamgir, "Factors influencing green product purchase intention among young consumers in Bangladesh," *Society & Sustainability*, vol. 3, no. 2, 2021.
[28] I. Waris, A. Iqbal, R. Ahmed, S. Hashim, and A. Ahmed, "Values and information publicity shape tourists' intentions to visit green hotels: an application of the extended value-belief norms theory," *Management of Environmental Quality: An International Journal*, vol. 35, no. 4, pp. 780–798, 2024.
[29] J. Liang, J. Li, and Q. Lei, "Exploring the influence of environmental values on green consumption behavior of apparel: A chain multiple mediation model among Chinese Generation Z," *Sustainability*, vol. 14, no. 19, p. 12850, 2022.
[30] J. M. Lopes, M. Pinho, and S. Gomes, "From green hype to green habits: Understanding the factors that influence young consumers' green purchasing decisions," *Business Strategy and the Environment*, vol. 33, no. 3, pp. 2432–2444, 2024.
[31] L. Zhang, J. Ruiz-Menjivar, B. Luo, Z. Liang, and M. E. Swisher, "Predicting climate change mitigation and adaptation behaviors in agricultural production: A comparison of the theory of planned behavior and the Value-Belief-Norm Theory," *J. Environmental Psychology*, vol. 68, p. 101408, 2020.
[32] M. Coşkun, "Exploring and communicating user diversity to inform the design of products promoting sustainable behaviors," Ph.D. dissertation, Middle East Technical University, Turkey, 2015.
[33] M. Nekmahmud, "Environmental marketing: Tourists' purchase behaviour response on green products," in *Tourism Marketing in Bangladesh*, Routledge, 2020, pp. 273–295.
[34] M. Nekmahmud and M. Fekete-Farkas, "Why not green marketing? Determinates of consumers' intention to green purchase decision in a new developing nation," *Sustainability*, vol. 12, no. 19, p. 7880, 2020.
[35] M. S. Hossain and M. S. Rahman, "Measuring the impact of green marketing mix on green purchasing behavior: a study on

ISBN 978-984-35-5270-9 *https://icebtm.iub.edu.bd*

Bangladeshi consumers," *The Comilla Univ. J. Business Studies*, vol. 5, no. 1, pp. 5–19, 2018.
[36] O. Koon, R. Y. Chan, and P. Sharma, "Moderating effects of socio-cultural values on pro-environmental behaviors," *Marketing Intelligence & Planning*, vol. 38, no. 5, pp. 603–618, 2020.
[37] O. N. Patiño-Toro et al., "Green purchase intention factors: A systematic review and research agenda," *Sustainable Environment*, vol. 10, no. 1, p. 2356392, 2024.
[38] P. J. Kumarasinghe, Q. Huang, and N. Rathnayake, "The Perspectives of University Academics on Their Intention to Purchase Green Smartphones in Sri Lanka," *Interdisciplinary J. Information, Knowledge, and Management*, vol. 18, pp. 369–385, 2023.
[39] P. Kamalanon, J. S. Chen, and T. T. Y. Le, "Why do we buy green products? An extended theory of the planned behavior model for green product purchase behavior," *Sustainability*, vol. 14, no. 2, p. 689, 2022.
[40] P. Pestana, "The Mediating Role of Green Knowledge in the Relationship between Consumer's Life Values, Income and Green Purchase Decision," M.S. thesis, Universidade Católica Portuguesa, Portugal, 2023.
[41] R. C. Chanda, S. M. Isa, and T. Ahmed, "Factors influencing customers' green purchasing intention: evidence from developing country," *J. Science and Technology Policy Management*, vol. 15, no. 5, pp. 1056–1084, 2023.
[42] S. Amin and M. T. Tarun, "Effect of consumption values on customers' green purchase intention: a mediating role of green trust," *Social Responsibility Journal*, vol. 17, no. 8, pp. 1320–1336, 2020.
[43] S. Darwish, A. M. Bazzi, and A. A. Ali, "Toward green purchase behavior: does sustainability become the dominant mare for Lebanese restaurants," *J. Hospitality and Tourism Insights*, 2025.
[44] S. Lee and S. Chang, "The decision-making process to consume sustainable food," *Int. J. Gastronomy and Food Science*, vol. 38, p. 101075, 2024.
[45] S. Sivarajah, "Exploring the impact of psychological and social factors on green consumer behaviour: a comprehensive review of green marketing tactics," *SN Business & Economics*, vol. 4, no. 12, p. 157, 2024.
[46] S. Su and Y. Li, "Exploring the Impact of the Green Marketing Mix on Environmental Attitudes and Purchase Intentions: Moderating Role of Environmental Knowledge in China's Emerging Markets," *Sustainability*, vol. 16, no. 24, p. 10934, 2024.
[47] S. K. Oruganti et al., *Digital Transformation and Sustainability of Business*, 1st ed., CRC Press, 2025. [Online]. Available: https://doi.org/10.1201/9781003606185
[48] S. K. Roy, "Impact of green factors on undergraduate students' green behavioral intentions: A hybrid two-stage modeling approach," *Heliyon*, vol. 9, no. 10, 2023.
[49] T. T. A. Ngo et al., "A comprehensive study on factors influencing online impulse buying behavior: Evidence from Shopee video platform," *Heliyon*, vol. 10, no. 15, 2024.
[50] T. Rana, M. J. Rahman, and P. Öhman, Eds., *Carbon Accounting for Sustainability and Environmental Management: Case Studies from China*, Taylor & Francis, 2025.
[51] Y. Hong, A. Al Mamun, M. Masukujjaman, and Q. Yang, "Significance of the environmental value-belief-norm model and its relationship to green consumption among Chinese youth," *Asia Pacific Management Review*, vol. 29, no. 1, pp. 127–140, 2024.
[52] Z. L. Al-Swidi and R. M. Saleh, "How green our future would be? An investigation of the determinants of green purchasing behavior of young citizens in a developing Country," *Environment, Development and Sustainability*, pp. 1–33, 2021.
[53] Z. U. Rehman, "Factors Influencing Malaysian Consumers' Intention to Purchase Green Products: A Moderating Role of Perceived Price Sensitivity," Ph.D. dissertation, Universiti Tun Hussein Onn Malaysia, 2023.
[54] Z. Zhang et al., "Predicting climate change mitigation and adaptation behaviors in agricultural production: A comparison of the theory of planned behavior and the Value-Belief-Norm Theory," *J. Environmental Psychology*, vol. 68, p. 101408, 2020.
[55] I. Zahan, S. Chuanmin, M. Fayyaz, and M. Hafeez, "Green purchase behavior towards green housing: an investigation of Bangladeshi consumers," *Environmental Science and Pollution Research*, vol. 27, pp. 38745–38757, 2020.
[56] S. Seyfi, C. M. Hall, and M. Strzelecka, Eds., *Gen Z, Tourism, and Sustainable Consumption: The Most Sustainable Generation Ever?*, Taylor & Francis, 2023.
[57] Habib, M. M., Sabah, S., Chowdhury, F., Raisa, R., & Shuvo, T. F. (2024). Technology Enabled Ready-Made Garments Supply Chain Management: a Literature Review. Revista de Gestão Social e Ambiental, 18(10), e08842.https://doi.org/10.24857/rgsa.v18n10-188
[58] Habib, M. M., Chowdhury, F., Sabah, S., Shuvo, T. F., & Raisa, R. (2025). Investigating the Technological Impact on RMG Supply Chain: A Post-Pandemic Scenario. American Journal of Industrial and Business Management, 15(7), 974-994. https://doi.org/10.4236/ajibm.2025.157046
[59] Shuvo, T. F., & Habib, M. M. (2024). Shifting Market Power: The Role of Supply Chain Disruptions in Redefining Global Trade Dynamics. Social Lens, 1, 34-46. https://doi.org/10.69971/sl.1.1.2024.8
[60] Shuvo, T. F., Habib, M. M., & Raisa, R. (2024). Innovative Technologies in Supply Chain Management for Bangladesh's

ISBN 978-984-35-5270-9 *https://icebtm.iub.edu.bd*

Ready-made Garments Sector–A Comprehen-sive Review. Digital Social Science, 2, 1-9. https://doi.org/10.69971/ek445y02
[61] Shuvo, T., & , . (2024, December). A Study on Supply Chain Challenges and Solutions for Smallholders in Bangladesh's Agriculture. In 7th IEOM Bangladesh International Conference on Industrial Engineering and Operations Management, https://doi.org/10.46254/BA07.20240192
[62] Shuvo, T. F., & Habib, M. H. (2024). Impact of ESG (Environmental, Social, and Governance) Investing on Financial Performance in Bangladesh. Supply Chain Research, 2(1), 8884.https://doi.org/10.59429/scr.v2i1.8884

VII. APPENDIX

Appendix A: Survey Instrument

Section A: Demographic Profile

Please select the most appropriate option for each item:

- Age
  □ Less than 18 □ 18–25 □ 26–35 □ 36–50 □ 51 and above
- Gender
  □ Male □ Female □ Other
- Education Level
  □ Secondary □ Higher Secondary □ Graduate □ Postgraduate
- Monthly Household Income (in BDT)
  □ <10,000 □ 10,000–25,000 □ 25,001–50,000 □ 50,001–75,000 □ >75,000
- Place of Residence
  □ Urban □ Rural
- Occupation
  □ Student □ Service Holder □ Business □ Homemaker □ Other

Section B: Environmental Values

Please indicate your agreement using a 5-point Likert scale (1 = Strongly Disagree, 5 = Strongly Agree)

Item	1	2	3	4	5
We are approaching the limit of the number of people the Earth can support.	□	□	□	□	□
Humans are severely abusing the environment.	□	□	□	□	□
Plants and animals have as much right as humans to exist.	□	□	□	□	□
The balance of nature is delicate and easily upset.	□	□	□	□	□
If things continue on their present course, we will soon experience a major environmental disaster.	□	□	□	□	□

Section C: Environmental Awareness and Familiarity

Rated on a scale from 1 = Not at all familiar to 5 = Extremely familiar

Item	1	2	3	4	5
Awareness of the harmful effects of plastic and pollution.	□	□	□	□	□
Familiarity with the term “eco-friendly” or “green products.”	□	□	□	□	□

ISBN 978-984-35-5270-9

Awareness of climate change issues in Bangladesh.	□	□	□	□	□
Familiarity with environmental labels (e.g., recyclable, biodegradable).	□	□	□	□	□

Section D: Green Purchase Behavior

How often do you engage in the following behaviors? (1 = Never, 5 = Always)

Item	1	2	3	4	5
I buy products labeled as eco-friendly or organic.	□	□	□	□	□
I prefer companies with strong environmental responsibility.	□	□	□	□	□
I avoid using plastic or non-recyclable materials.	□	□	□	□	□
I am willing to pay more for green products.	□	□	□	□	□
I encourage others to buy green products.					

Section E: Open-Ended Questions

1. What motivates you the most to buy eco-friendly products?
   .....
   .....

2. What challenges do you face when buying green products (e.g., price, availability, trust)?
   .....
   .....

Appendix B: Statistical Outputs

Descriptive Statistics (Selected Items)

Variable	Mean (M)	Standard Deviation (SD)
"Humans are severely abusing the environment"	4.35	0.82
"We will soon face an environmental disaster"	4.20	0.79
"I buy eco-labeled products"	3.36	0.94
"Willingness to pay more for green products"	3.42	1.02

Reliability Analysis

- Cronbach's Alpha (12 Likert-scale items): 0.864 → Indicates high internal consistency.

Exploratory Factor Analysis (EFA)

- Extraction Method: Principal Component Analysis
- Rotation Method: Varimax
- KMO Measure of Sampling Adequacy: 0.812
- Bartlett's Test of Sphericity: $\chi^2(66) = 872.43$, $p < 0.001$

Extracted Factors:

- Factor 1: Environmental Values
- Factor 2: Environmental Awareness
- Factor 3: Green Purchase Behavior

Correlation Matrix (Significant Associations)

ISBN 978-984-35-5270-9 *https://icebtm.iub.edu.bd*

Variable Pair	**Pearson's r**	**p-value**
Willingness to Pay × Green Purchase Behavior	0.55	< 0.01
Eco-Label Familiarity × Avoiding Plastic Use	0.44	< 0.01
Climate Change Awareness × Purchase Intention	0.48	< 0.01
Biospheric Values × Green Purchase Intention	0.50	< 0.01

Regression Analysis (OLS Model)
Dependent Variable: Green Purchase Behavior

Predictor	**β (Standardized)**	**p-value**
Willingness to Pay More	0.35	< 0.001
Corporate Environmental Responsibility	0.28	0.002
Climate Change Awareness	0.21	0.011
Perceived Environmental Degradation	0.18	0.033

- Adjusted $R^2 = 0.63$
- $F(8,191) = 40.21$, $p < 0.001$

Mediation Analysis (Hayes' PROCESS – Model 4)

- Mediator: Green Purchase Intention
- Indirect Effect (Environmental Values → Behavior via Intention):
  $\beta = 0.22$, 95% Confidence Interval [0.11, 0.33], $p < 0.01$
  → Indicates partial mediation.

ISBN 978-984-35-5270-9 *https://icebtm.iub.edu.bd*